fireframes®
CURTAINWALL SERIES

Technical Glass Products
Architectural Specification Manual

800.426.0279 | fireglass.com

TGP FIRE RATED
one source. many solutions.®

FIREFRAMES® CURTAINWALL SERIES ARCHITECTURAL SPECIFICATION MANUAL

The Fireframes® Curtainwall Series frame system allows for large, multi-story expanses of fire-rated glass and frames in both interior and exterior applications. Envision expansive window openings, with more glass and less frame. Along with exterior applications, lobbies and atriums are well suited to the use of fire rated curtain wall to provide uninterrupted views. Floor to ceiling fire-rated curtain walls can be used to divide interior spaces while offering security and aesthetic appeal as well as fire protection. In addition, Fireframes® Curtainwall Hurricane Series is available for hurricane applications. Fireframes Curtainwall is just one of the many expressions of creativity that are changing traditional thinking about fire-rated glass and framing. The future of fire safety has never looked so good.

For specifications, photographs and additional information contact:

Technical Glass Products
8107 Bracken Place SE
Snoqualmie, WA 98065

Office: 800.426.0279
425.396.8200
Fax: 425.396.8300
E-mail: sales@fireglass.com
Web: fireglass.com

Table of Contents

System Exploded Assembly

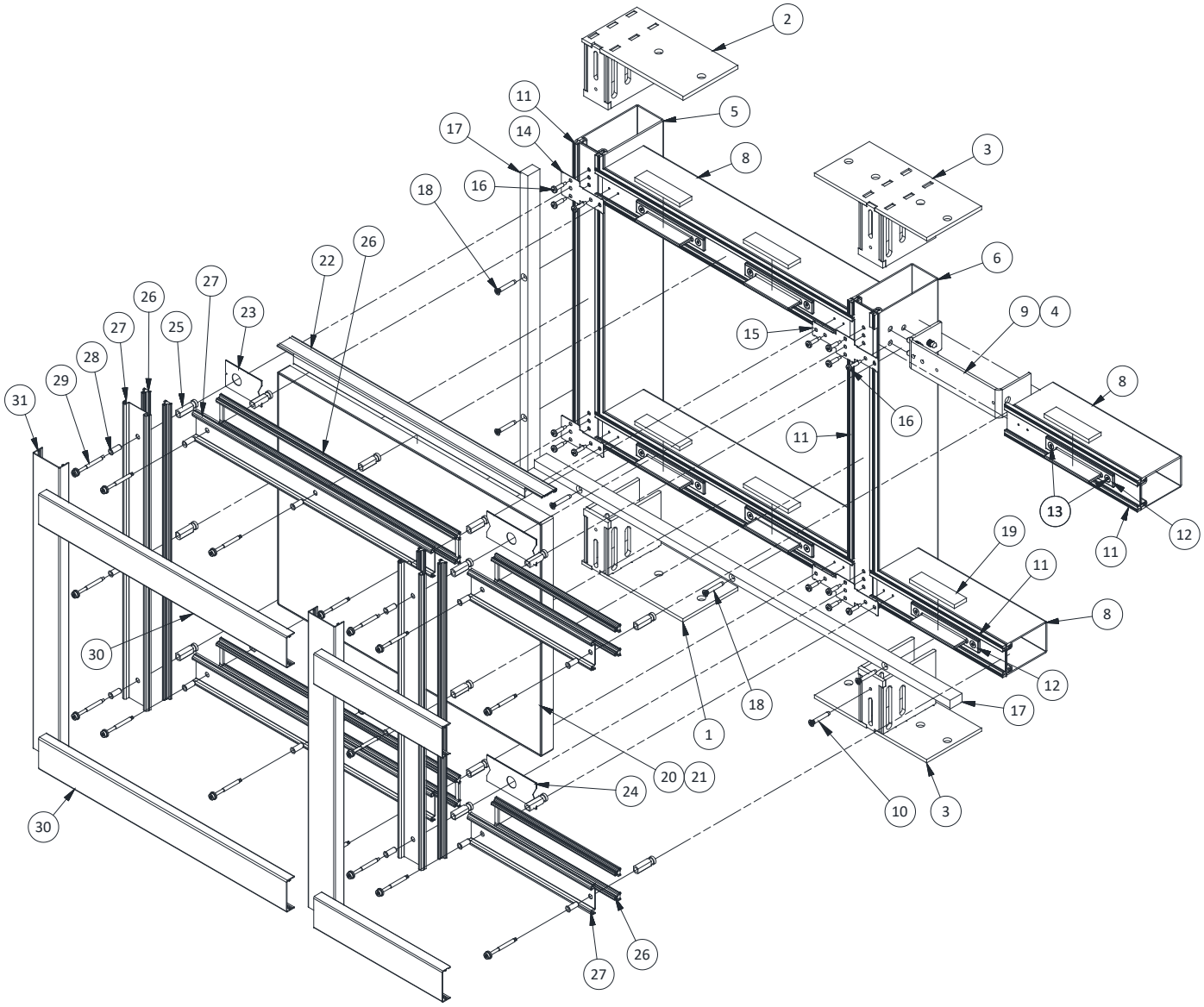

Figure 1 - System Exploded Assembly View

Material Key Chart

Item(s)	Material	Fasteners Provided With Fireframes Curtainwall Series
16	CONNECTING PLATE SCREW	Connecting plate screws (Torx T25) for connecting "T" and "X" type connecting plates over mullion gasket intersections.
13	GLAZING PLATFORM SCREW	M6-1.0 x 16mm stainless steel flat head socket cap screws are provided for connecting bolt-on glazing platforms to horizontal mullions.
29	PRESSURE PLATE SCREW	Self-drilling screw (Torx T27) provided at appropriate length for connecting pressure plates and temporary pressure plates to mullions.
18	PERIMETER SPACER SCREW	#12-11 stainless steel Phillips flat head sheet metal screws are provided for connecting perimeter spacers to mullions.
10	SILL ANCHOR SCREW	Non-welded sill anchors will have an M6-1.0 x 25mm screw securing the anchor to the mullion.
4	SLIDING SHEAR CLIP SCREW	Frames using sliding shear clips have an M6-1.0 x 30mm screw used to lock the shear clip into position once installed.
Item(s)	**Material**	**Components Provided With Fireframes Curtainwall Series**
1, 2, and 3	ANCHORS	Head and Sill anchors at vertical mullions are provided for jamb and intermediate mullion conditions. For Hurricane applications, anchors are available for concrete, steel, or timber surrounding conditions.
14 and 15	CONNECTING PLATE	Connecting plates, "T" and "X" styles, fit over freshly sealed mullion gasket joints at horizontal and vertical mullion intersections.
30 and 31	COVER CAP	Snap on cover caps are provided for horizontal and vertical members.
23 and 24	COVER PLATE	Cover plates, similar to the connection plates, are used at the horizontal and vertical pressure plate intersections and are applied to the exterior face of the glass under the pressure plates.
22	DIVERTER GASKET	The diverter gasket may be integral to the horizontal mullion gasket, or it may be supplied as a separate gasket. See Fireframes project drawings for details.
20	FIRE-RATED GLAZING MATERIAL	Refer to the Fire-Rated Glazing Options and Specifications, and Glazing Installation Instructions.
-	FLEXIBLE FLASHING	On exterior applications, silicone linear flexible flashing and molded corner flashings may be provided.
-	FOAM BAFFLE	A foam baffle (M2-045) is required at intermediate weeps (Section 15) on exterior elevations over 20 feet (6m) tall.
12	GLAZING PLATFORM	Bolt on glazing platforms are installed on sill and intermediate horizontals mullions.
25 and 28	GUIDE BUSHING	Guide Bushings and Bushing Separators are provided to help guide the pressure plate screws and protect the glass during installation.
21	INTUMESCENT TAPE	**REQUIRED** on all applications, fire-rated intumescent tape as supplied must be installed on the glass at each opening.
5, 6, and 8	MULLIONS	Vertical and horizontal mullions are cut to size and pre-machined.
11	MULLION GASKET	Black silicone gaskets for horizontal and vertical mullions may be shipped loose for field installation.
17	PERIMETER SPACER	Spacers are made of hardwood, and are typically supplied in stock lengths not exceeding 96" for field trimming.
27	PRESSURE PLATE	Pressure plate, gaskets, and guide bushings are provided.
26	PRESSURE PLATE GASKET	EPDM seal required for pressure plate.
19	SETTING BLOCKS	6 mm calcium silicate setting blocks shipped loose for field installation. Hardwood or silicone setting blocks are also allowable.
9	SHEAR CLIPS	Sliding shear clips (or welded shear clips) are provided for each horizontal mullion.
-	TEMPORARY PRESSURE PLATE	A quantity of temporary pressure plates are provided to aid in the installation of the glass.

Figure 2 - Provided by TGP Material Key Chart

Material Key Chart

Material	Required Material **NOT PROVIDED** With Fireframes Curtainwall Series
ANCHORS (Special)	If required per the approved Fireframes drawings, intermediate wind-load (dynamic) and/or dead load (fixed) anchors provided by other trades.
ANCHOR FASTENER	As constructions vary widely in design, perimeter fasteners (anchors) are supplied by others.
FINISH SEALANT	Sealant installed into the interior and exterior perimeter cavity. Select color for sealant to match frame or as directed by project architect.
FIRESAFING	**REQUIRED** on all applications, mineral wool and/or fire rated caulking must be installed between the perimeter frame and surrounding conditions. Intumescent sealant or firmly packed mineral wool must be installed in a continuous fashion between frame assembly and wall construction, being interrupted only by the perimeter anchor and/or anchor shims. Sealant manufacturers such as Tremco, Pemko and many others supply intumescent sealants.
SHIMS	Perimeter shims at anchor locations are to be of hardwood (oak) or non-combustible (steel) materials. **Plastic shims may not be used.**
WEEPS AND BAFFLES	When weeps or baffles are required at the sill condition of exterior applications, a 5/16" minimum inside diameter weep is recommended. A 30 ppi reticulated foam baffle, compressed to 50% original size is recommended.
WALL CONDITION	Rated wall construction by other trades.

Figure 3 - Not Provided by TGP Material Key Chart

General Information

This document is meant as a general description of typical installations. As such, it is the responsibility of the installer to ensure the frame materials are installed per the conditions that exist on any given project in accordance with these instructions and project drawings. TGP project drawings may detail modifications to the surrounding conditions required for a given project, (if architectural details or sketches were provided to TGP) and should be used in conjunction with these instructions. In the event of any conflict between these instructions and TGP project drawings, the TGP project drawings shall govern. TGP does not accept any warranty and/or liability for installations not in compliance with this document or other non-conforming use of the TGP products and/or system. Contact TGP with questions concerning these details as they apply to the particulars of a given project.

FEATURES

- Fire ratings of 45, 60, 90, and 120 minutes.
- Unrestricted glazing area for use in locations where total glazing exceeds 25% of wall area (except for 45 minute rating).
- Full-lite doors available in single leaf or double leaf design (see Fireframes Designer Series or Fireframes Heat Barrier Series).
- Narrow steel profiles.
- Air and water pressure tested and approved for exterior use.
- Easy installation; similar to typical pressure plate curtain wall.
- Frames supplied as “K.D.” (knock-down) for field installation.
- Pressure-glazed with EPDM or silicone gaskets.
- Can incorporate large individual panes of Pilkington Pyrostop® glass.
- Durable steel frames ensure low maintenance system.
- Custom cover caps (aluminum, stainless steel, etc.) to meet project needs.
- Factory finished to match desired color scheme.
- Fabricated in the U.S.A.
- Available for hurricane applications.

TESTING DATA

Test Type	Per	Standards	Measured	Results
Air Infiltration	ASTM E283-91	CFM per square foot @ 1.57 PSF Reported to the second decimal TOTAL CFM	0.1 0.07 3.93	Passed
Water Resistance	ASTM E547-00 ASTM E331-00	@ 30.00 PSF leakage after: 4 cycles of 5 minutes 1 cycle of 15 minutes	None	Passed
Uniform Structural Load	ASTM E330-97	Damage from a load of: +125.00 PSF -125.00 PSF Permanent Set Deflection	None None 0.005” 0.317”	Passed

General Information

CURTAINWALL HURRICANE TESTING DATA

Test Type	Per	Standards	Measured	Results
Level of Protection	ASTM E1996-09	Basic Protection	None	Passed
Wind Zone	ASTM E1996-09	Wind Zone 4 – Basic Wind Speed	> 140 mph (63 m/s)	Passed
Design Pressure	ASTM E1886-05 TAS 202-94	Damage From a Load of: +110.00 PSF (+5267 Pa) -110.00 PSF (-5267 Pa)	No Damage	Passed
Air Infiltration	TAS 202-94	Tested at 6.24 PSF (299 Pa)	0.063 cfm/ft^2 (0.32 L/s*m^2)	Passed
Water Penetration Resistance Pressure	TAS 202-94	Tested at 16.5 PSF (790 Pa)	No Leakage at 16.5 PSF (790 Pa)	Passed
Impact Testing (Large Missile)	TAS 201-94 ASTM E1886-05 ASTM E1996-09	Damage From a Load of: +110.00 PSF (+5267 Pa) -110.00 PSF (-5267 Pa)	No Openings Greater Than 130 mm x 1 mm	Passed
Cyclic Wind Pressure Load Testing	TAS 203-94 ASTM E1886-05	Damage From a Load of: +110.00 PSF (+5267 Pa) -110.00 PSF (-5267 Pa)	Anchors Fully Intact and No Openings Greater Than 130 mm x 1 mm	Passed
Forced Entry Test	TAS 202-94	Standard Test Methods for Measuring the Forced Entry Resistance of Window Assemblies, Excluding Glazing Impact	No Damage	Passed

LISTINGS

- Listed and labeled by Underwriters Laboratories, Inc.® as Design Number U537 and Underwriters Laboratories of Canada as W473.
- Frame tests performed in accordance with ASTM E-119 (60-120 minutes), NFPA 251, NFPA 257, UL 263, UL 9, UL 10C, ASTM E283, ASTM E330, ASTM E331, ASTM E547, AAMA 501.1, CAN/ULC-S101, and CAN4 S-106.
- Approved for use in Los Angeles – **LARR 25798.**
- Fireframes Curtainwall Hurricane Series is approved under FL24474 and tests performed in accordance with AAMA 501-05, ASTM E1886-05, ASTM E1996-09, ASTM E330, TAS 201-94, TAS 202-94, and TAS 203-94.

General Information

SIZING GUIDELINES

Frame Rating	Maximum Exposed Glass Area Per Piece	Maximum Exposed Glass Single Dimension	Maximum Frame Size
45 Minutes *	31.25 sq. ft. 4,500 sq. in. 2.9 sq. m.	95-1/4” 2419 mm	Maximum area: 152 sq. ft. (22,888 sq.in.) 14.12 sq. m. Maximum single dimension: 13’-6” 4,115 mm
60 Minutes (Pyrostop 23 mm)	39 sq. ft. 5,616 sq. in. 3.62 sq. m.	96” 2,438 mm	n/a **
60 Minutes (Pyrostop ≥ 26 mm)	51.7 sq. ft. 7442 sq. in. 4.8 sq. m.	Maximum width: 96” 2,438 mm Maximum height: 118-1/8” 3,000 mm	n/a **
120 Minutes	25.9 sq. ft. 3,730 sq. in. 2.41 sq. m.	111” 2,819 mm	n/a **
Fireframes® Curtainwall Hurricane Series			
60 Minutes	39 sq. ft. 5,616 sq. in. 39 sq. ft.	96” 2,438 mm	n/a **
120 Minutes	25.9 sq. ft. 3,730 sq. in. 2.41 sq. m.	96” 2,438 mm	n/a **
Sizing and Glazing Notes: Refer to the rows above.			
* Opening Protective – Limited size IBC Fire Window Assembly Fire Protection Rating Table 715.4 ** 60 and 120 minute tests conducted per UL 263 / ASTM E119. Therefore assembly is classified as a wall assembly, and not subject to “opening” area limitations.			

AMERICANS WITH DISABILITY ACT STANDARDS ON FIRE PROTECTION DOORS

If fire doors were required to meet A.D.A. (Americans with Disability Act) Standards, many would not open or close with adequate force to prevent passage of flame and smoke. Recognizing this special fire safety need, NFPA 101 (National Fire Protection Association) allows operational features for fire doors (opening forces, closing speeds, etc.) that are different than for non-fire-rated doors. These fire “protective” steel doors carry ratings from 20-90 minutes for fire protection. Heat transfer through the door is not an issue, so they are constructed without interior insulation.

General Information

DOORS IN FIREFRAMES CURTAINWALL SERIES FRAMES

Fireframes Designer Series and Fireframes Heat Barrier Series door frames and doors may be installed into the Fireframes Curtainwall Series frames. For more details on installation, refer to those specific product's Architectural Specification Manuals.

CONVENTIONAL WOOD OR HOLLOW METAL DOORS IN FIREFRAMES CURTAINWALL SERIES FRAMES

Fireframes® Designer Series or Fireframes® Heat Barrier Series doors are compatible with Fireframes Curtainwall Series framing. Additionally, conventional fire-rated wood or hollow metal doors can also be installed into Fireframes Curtainwall Series frames, but will require coordination with respect to preparation of door hardware. Prior to producing your shop drawings, TGP will need to evaluate relevant hardware schedule information. When ordering wood or hollow metal doors, you must supply our engineering staff with the manufacturer, model number, fabrication templates, door handing and, if required, physical samples. If TGP must prepare special fabrication drawings to accommodate your hardware needs, your project lead time may be extended.

FIRE-RATED GLAZING OPTIONS

Technical Glass Products provides a complete line of fire-rated glazing options to complement the Fireframes Curtainwall Series frame system. Refer to your Technical Glass Products SpeciFIRE® Selection Guide, available from your sales representative or online at **www.fireglass.com**.

Please consult your Technical Glass Products sales representative to determine the best option for your application.

Glazing Product	Available Fire Rating (minutes)	Offers High Impact Safety	Passes Hose Stream Test	Reduces Heat Transfer	Complies with Energy Codes	Compatible with TGP Framing	Provides Acoustic Barrier	Advantages / Disadvantages
Pilkington Pyrostop®	45/60/120	●*	●	●		●	●	+ High clarity + Larger sizes - Can be heavy
Pilkington Pyrostop® IGU	45/60/120	●*	●	●	●	●	●	+ High clarity + Larger sizes - Can be heavy

Note: * Meets CPSC 16CFR1201: Category I and II.

General Information

GLAZING SPECIFICATIONS

Pilkington Pyrostop® fire resistant glass provides up to a two (2) hour fire rating. It can also be combined with other glazing products to achieve nearly any level of security protection and performance.

The Fireframes Curtainwall Series when combined with Pilkington Pyrostop at 60 minutes or greater, is classified and listed with UL as a transparent wall; a fire resistive assembly that blocks the transfer of radiant heat during a fire. Lower ratings (45 minute) are considered a window assembly.

Manufacturer's Designation	45-200	45-260 or *45-360	60-101	60-201	60-261 or *60-361	120-202	120-104	120-262 or *120-362	120-203 or 120-203 TI
Fire Rating (minutes)	45	45	60	60	60	120	120	120	120
Glazing Type	Single	IGU	Single	Single	IGU	Single	IGU	IGU	IGU
Application	Interior Exterior	Interior Exterior	Interior	Interior Exterior	Interior Exterior	Interior Exterior	Interior	Interior Exterior	Interior Exterior
Nominal Thickness	3/4" 19 mm	1-1/4" 33 mm	7/8" 23 mm	1-1/16" 27 mm	1-5/8" 41 mm	1-9/16" 40 mm	2-1/8" 54 mm	2-1/8" 54 mm or 2-3/8" 60 mm	2-3/8" 61 mm
Weight - Pounds per Sq. Ft. (approx.)	9.22	12.49	10.85	12.90	15.77	19.46	21.71	22.12	24.99
Daylight Transmission (approx.)	84%	75%	88%	88%	78%	85%	78%	75%	74% 63% (TI)
STC Rating (dB) (approx.)	40	40	41	44	44	46	46	46	44
UL-752 Bullet Resistance Rating				Level I		Level II			

NOTES:
- ✱ Exterior IGU is available with Low E or Solar Control coating.
- Δ Opening Protective – Limited size IBC Fire Window Assembly Fire Protection Rating Table 715.4
- □ UL Listed as Wall Assembly as per UL 263 / ASTM E-119.

General Information

Fireframes® Curtainwall Hurricane Series						
Manufacturer's Designation	60-260 HR Triple	60-260 TI HR Triple	60-360 HR Triple	60-360 TI HR Triple	120-260 HR Triple	120-360 HR Triple
Fire Rating (minutes)	60	60	60	60	120	120
Glazing Type	IGU	IGU	IGU	IGU	IGU	IGU
Application	Interior Exterior	Interior Exterior	Interior Exterior	Interior Exterior	Interior Exterior	Interior Exterior
Nominal Thickness	2-3/4" 69 mm	2-3/4" 69 mm	2-3/4" 69 mm	2-3/4" 69 mm	3-1/4" 82 mm	3-1/4" 82 mm
Weight - Pounds per Sq. Ft. (approx.)	22.22	22.22	22.22	22.22	27.96	27.96

General Information

GLAZING SPECIFICATIONS

60-101 – 60 Minute Interior Window

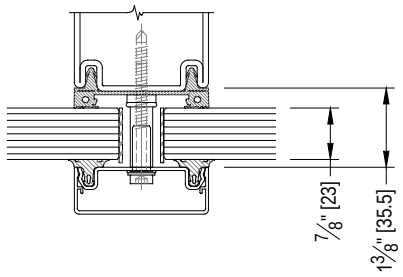

60-201 – 60 Minute Exterior Window

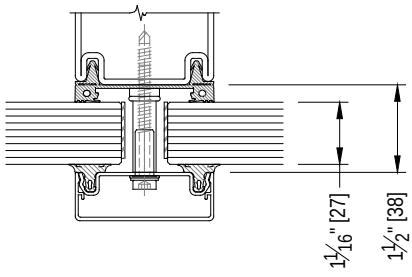

60-261 / 60-361 – 60 Minute Exterior Window

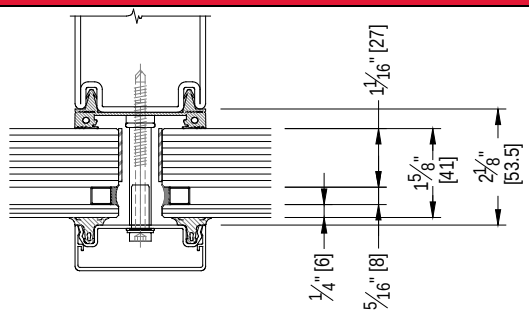

120-104 – 120 Minute Interior Window

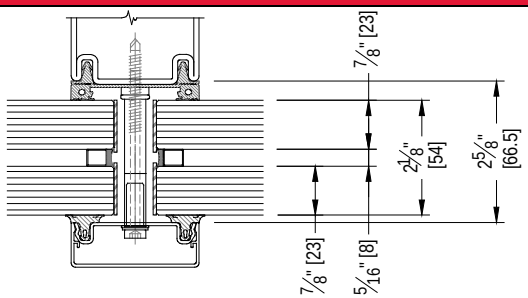

120-202 – 120 Minute Exterior Window

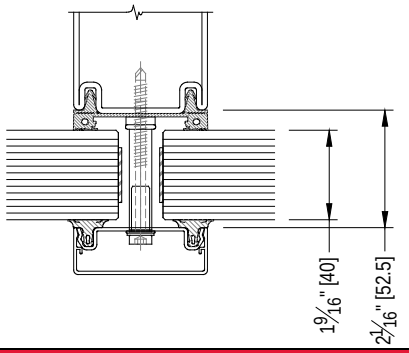

120-262 / 120-362 – 120 Minute Exterior Window

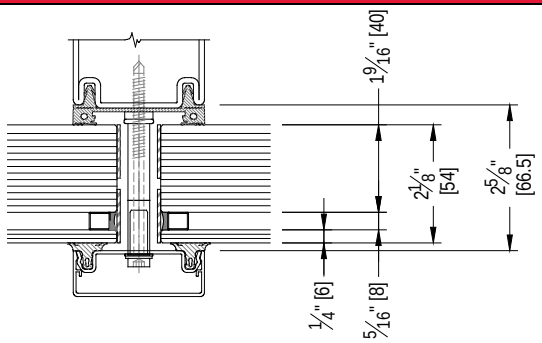

45-200 – 45 Minute Interior Window

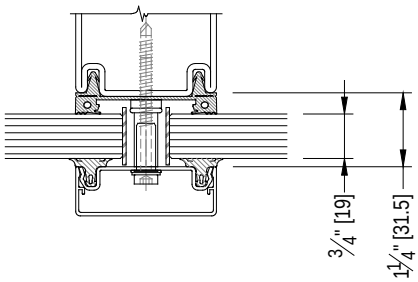

45-260 / 45-360 – 45 Minute Exterior Window

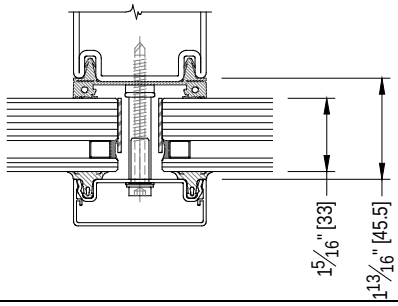

General Information

Fireframes® Curtainwall Hurricane Series	
60-260 HR Triple / 60-260 TI HR Triple – 60 Minute 60-360 HR Triple / 60-360 TI HR Triple – 60 Minute Exterior Window	120-260 HR Triple / 120-360 HR Triple – 120 Minute Exterior Window
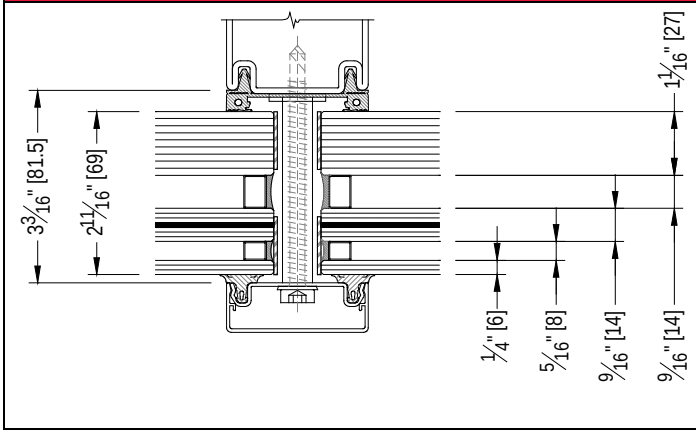	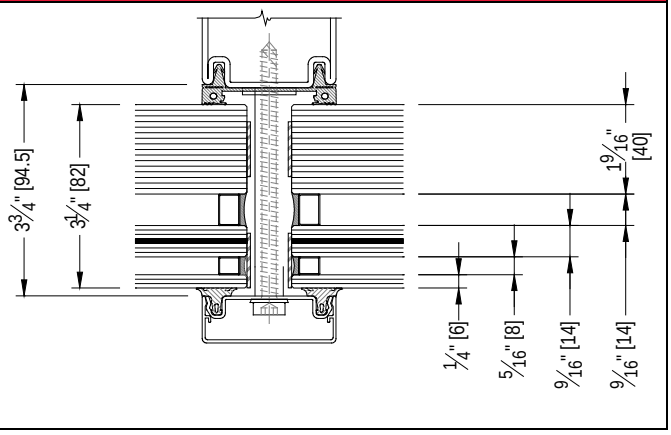

ANGLE SEGMENTED FRAMES

For interior and exterior applications utilizing the 60 mm wide profiles, the horizontals and glass can be angled up to a maximum of six degrees (6°) on either side of the shared vertical mullion (Figures 4 and 5). This configuration requires welded shear clips which have exposed fasteners on each side of the horizontal mullion. Angle segmented frames are not allowed in Fireframes® Curtainwall Hurricane Series.

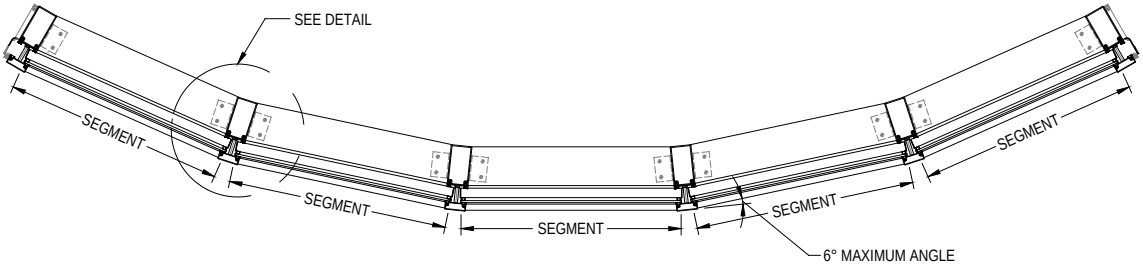

Figure 4 - Segmented Frame Plan View

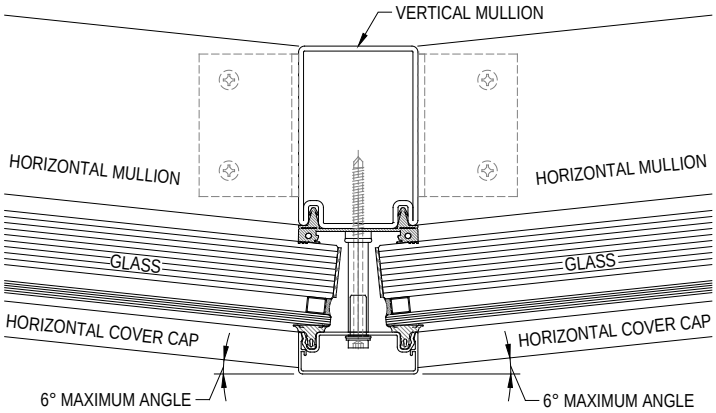

Figure 5 - Segmented Frame Detail

Recommended Guidelines

1. REVIEW CONTRACT DOCUMENTS

Review architectural drawings, specifications, approved TGP project drawings, installation instructions, and shipping lists to become thoroughly familiar with the project. The TGP project drawings take precedence and include specific details for your installation. These installation instructions are of a general nature and cover most conditions.

2. BUILDING CODES

Due to the diversity in local, state / provincial, or federal laws and the codes that govern design and application of architectural products, it is the responsibility of the individual architect / owner and installer to ensure that products selected for use on projects comply with all the applicable building codes and laws. Technical Glass Products exercises no control over the use or application of its products, glazing materials, and operating hardware and assumes no responsibility thereof. Compliance of TGP project drawings with applicable codes for a given project shall be the responsibility of the Buyer.

3. COORDINATION WITH OTHER TRADES

Coordinate with the general contractor any sequence with other trades which impact installation (i.e. fire proofing, back-up walls, partitions, ceilings, mechanical ducts, converters etc.) or in which installation may impact the work of adjacent trades.

4. INSTALLATION

All materials are to be installed plumb and level.

5. BENCH MARKS

All work should start from bench marks and/or column lines as established by the architectural drawings and the general contractor with guaranteed accuracy. Using these datum points and lines, determine:

a. The plane of the wall in reference to offset lines provided on each floor;

b. The finish floor lines in reference to bench marks on the outer building columns; and

c. Mullion spacing from both ends of openings to prevent dimensional build-up of daylight opening.

6. SURROUNDING CONDITIONS

Unless specifically contracted to do so, TGP does not draw or detail the project specific surrounding conditions (the area of the building that surrounds the TGP framing). Coordination of adjacent material and construction tolerances to TGP's systems must be facilitated by the installer. TGP recommends that a professional engineer review the project drawings to verify the structural integrity of the installation. Please contact TGP if you would like a quote for fully detailed project drawings including surrounding details and or Professional Engineering (PE) services.

a. Coordination of adjacent material and construction tolerances to TGP's systems may be facilitated by TGP as part of preparing project drawings, and these drawings may indicate acceptable tolerances for critical dimensions. The installer should verify that surrounding construction is in accordance with the approved project drawings. Do not accept rough opening dimensions less than shown on project drawings. It is assumed that the minimal joint dimensions shown on the TGP project drawings match the field conditions. A frame may fit within a given opening but sealants may not perform as detailed if a smaller sealant joint is installed. Expansion / contraction issues may also be compromised. IF THE JOINTS ARE SMALLER THAN THAT SHOWN ON THE TGP PROJECT DRAWINGS, DO NOT PROCEED. Notify the General Contractor that the conditions are not as detailed and wait for corrective work to be completed before starting this work.

b. The installer MUST notify and receive approval from TGP and the general contractor when conditions are not in accordance with approved project drawings and/or change any aspect of the structural performance of the Fireframes Series before making any modifications to the TGP-furnished material or making changes which are different from those shown on the TGP project drawings. These conditions include, but are not limited to, anchor placement/location, changes in adjacent materials the anchor is being connected to or changes to dimensional relationships between framing, anchors and connection to adjacent materials.

c. TGP must review and approve in writing any changes required prior to the subcontractor installing any "corrective" work. These reviews may incur additional charges, which must be approved by the TGP customer prior to TGP's review.

7. FRAME CONSTRUCTION VARIES

All frames are shipped "K-D" (knock-down) and are to be assembled on site. TGP does not pre-assemble frames prior to shipment as the method for doing so is not intended for long shipping distances. Component parts such as anchors, spacers, and gaskets are shipped loose. Depending on the installer's preference, some of these components may be pre-assembled at your shop prior to transporting to job site.

8. FASTENING

Within the body of these instructions, "fastening" means any method of securing one part to another or to adjacent materials by means other than welding, adhering or using a mechanical fastener as shown on the approved details. Only those fasteners used within the system are specified in these instructions. **Due to the varying perimeter conditions and performance requirements, perimeter and anchor fasteners are not specified in these instructions and are the responsibility of the installer.**

9. SEALANTS

a. Sealants must be compatible with all materials they are in contact with, including other sealant surfaces. Consult with sealant manufacturer for recommendations relative to joint size, shelf life, compatibility, cleaning/priming, tooling, adhesion, etc.

b. The chemical compatibility and/or adhesion of all glazing materials and framing sealants with each other and with like materials used in glass and frame fabrication must be established by the installer. This is required on every project.

c. If required by the project specifications, it is the responsibility of the glazing contractor to submit any documentation or samples from the sealant manufacturer indicating that glass and glazing material has been tested for chemical compatibility and/or adhesion with glazing sealants. **This applies to all TGP materials in contact with any sealant.** TGP will furnish samples of these materials upon request.

d. The implementation of the test results is the responsibility of the installing contractor, and includes material performance and recommendations for primers and substrate preparation required to obtain adhesion.

10. PERIMETER JOINTS

Perimeter seals and/or expansion joints shown in these instructions and in the TGP project drawings are shown at nominal size. Actual dimensions may vary due to perimeter conditions and/or difference in metal temperature between the time of fabrication and the time of installation. Design and detailing have been based on a fabrication / installation temperature of 70° F (21° C). If extreme temperatures exist at time of installation, gaps between expansion members may require slight adjustment.

11. CLAMPING SCREW TORQUE

Edge pressure must not exceed 11.5 pounds per linear inch. This pressure is required on the Fireframes Curtainwall Series mullion gaskets. It must be uniformly applied by the exterior mounted pressure plate, through the glass, to the mullion gaskets. **Excessive or irregular edge pressure WILL CAUSE deformation and breakage.**

12. WATER HOSE TEST

Exterior installations may require a water test in accordance with AAMA 501.2. As soon as a representative amount of the wall has been glazed (500 square feet or 46.5 square meters) a water hose test should be conducted. This test should be repeated for every 500 square feet (46.5 square meters), or as stipulated by specification, after all components have been installed.

13. FIELD ANCHORS

Steel or stainless steel anchors that are welded to steel structure or are bolted to embed must be line set before mullions are placed. Outstanding leg of anchors must be at 90° to offset lines. Mullion spacing should be held to ±1/32" (0.8 mm). Anchors may vary per job conditions. On stainless steel mullion projects, stainless steel anchors may be used, therefore, proper welding procedures must be followed. Always refer to approved project drawings for specific job site conditions.

a. AWS-certified welders are recommended to be used to install all field weld conditions called out in the TGP project drawings. The responsibility of using experienced, certified welders is the installing contractor's, not TGP's.

b. All field welding must be adequately shielded to avoid any splatter on glass or frame components. Results of inadequately shielded field welding will be unsightly and /or structurally unsound. Advise general contractor and other trades accordingly.

c. TGP typically finishes all steel material to protect from corrosion during shipping and storage on site prior to installation. For powder coated finishes, it is required to grind off the finish at the expected weld location prior to welding operations. The field weld must be re-finished with a zinc rich primer (in unexposed areas) or with touch-up paint (in exposed areas) after the welding is completed. Welds should never be left unpainted or unfinished. TGP can furnish small quantities of touch-up paint as required to match the original finish.

14. STAINLESS STEEL

On projects with stainless steel mullions specified, certain precautions must be taken for proper installation.

a. When fastening any screw into the mullion, a constant torque tool such as a regular drill or screw gun must be used. Impact style "bit-drivers" must NOT be used as the increased torque will likely break the screws.

b. If field drilling the mullions is required, sharp drill bits must be used with constant pressure maintained on the drill bit at all times to avoid work-hardening the hole. Lubrication, such as a cutting fluid, is recommended.

ATTENTION: Stainless steel fasteners used on this system need special care during installation. Loctite® brand anti-seize must be used for all stainless steel fastener installation. If no lubrication is used, the fasteners have a higher chance of galling and seizing during installation; this will either strip or break fasteners. If the fastener seizes or strips, the fastener must be removed and replaced. Final fastener tightening should be done in accordance with other sections as described herein.

45 mm System Profile Options

45 mm MULLION PROFILE OPTIONS

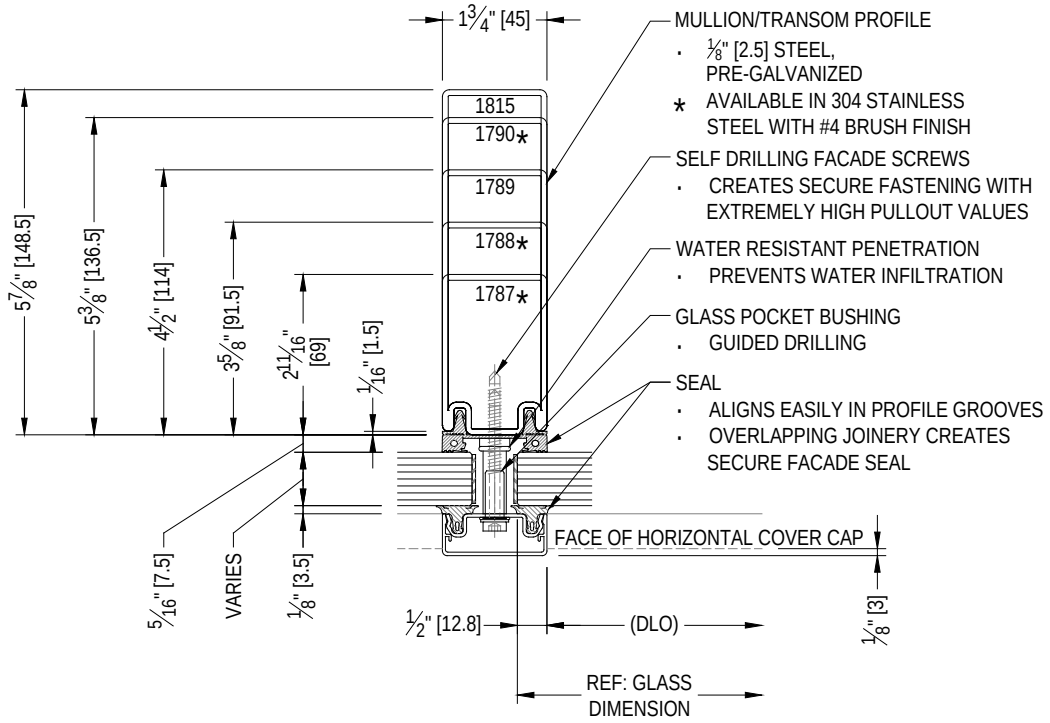

PRESSURE PLATE AND GASKET

STAINLESS STEEL

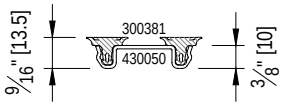

COVER CAP, PRESSURE PLATE AND GASKET

STAINLESS STEEL COVER CAPS

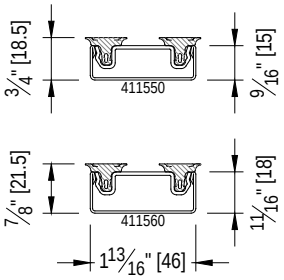

ALUMINUM COVER CAPS

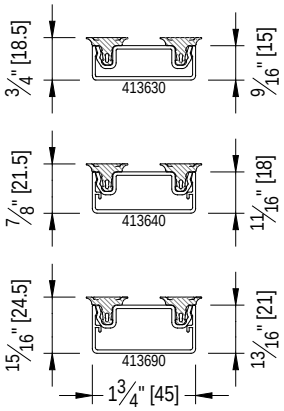

45 mm System Elevations

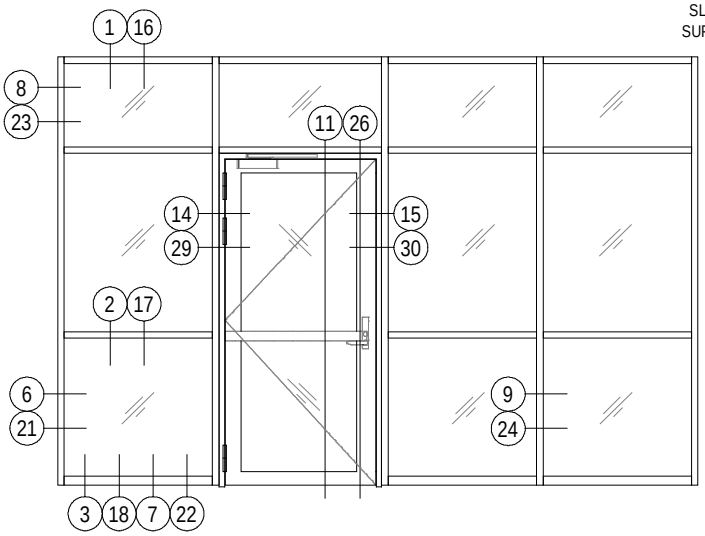

A WINDOW AND SINGLE DESIGNER SERIES DOOR
45 MM SYSTEM

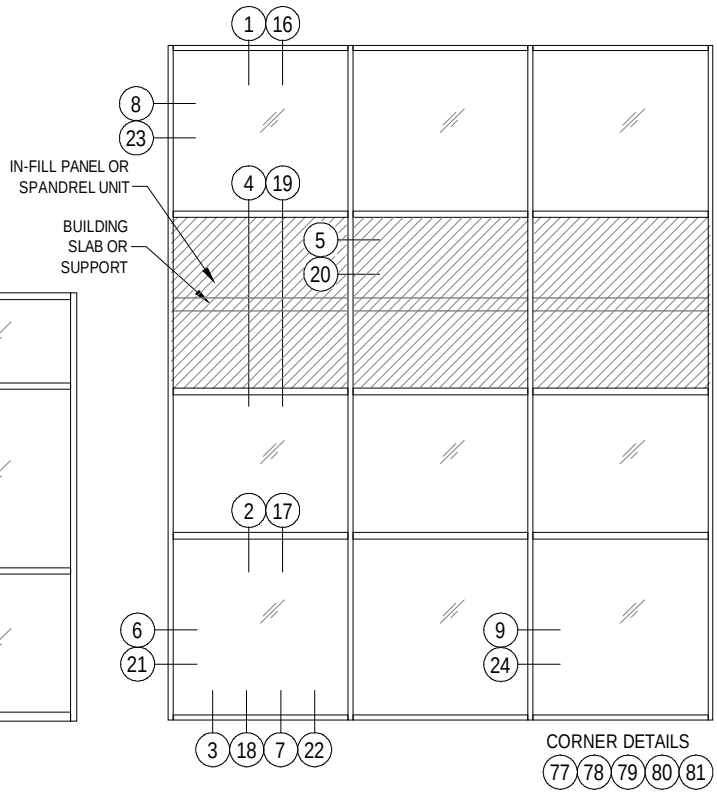

B WINDOW
45 MM SYSTEM

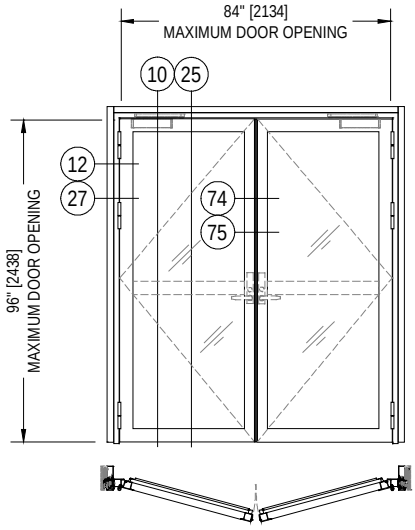

C ACTIVE / ACTIVE DESIGNER SERIES DOOR
45 MM SYSTEM

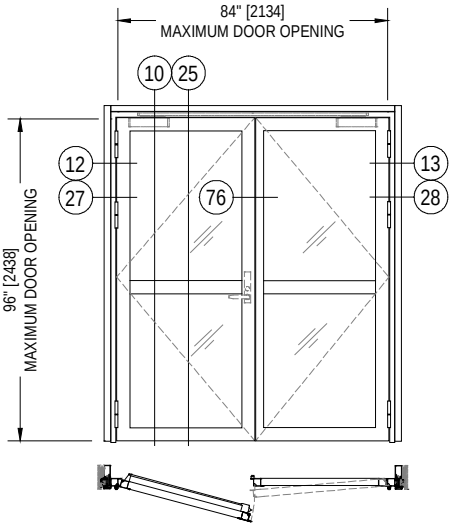

D ACTIVE / FIXED DESIGNER SERIES DOOR
45 MM SYSTEM

45 mm System Interior Section Details

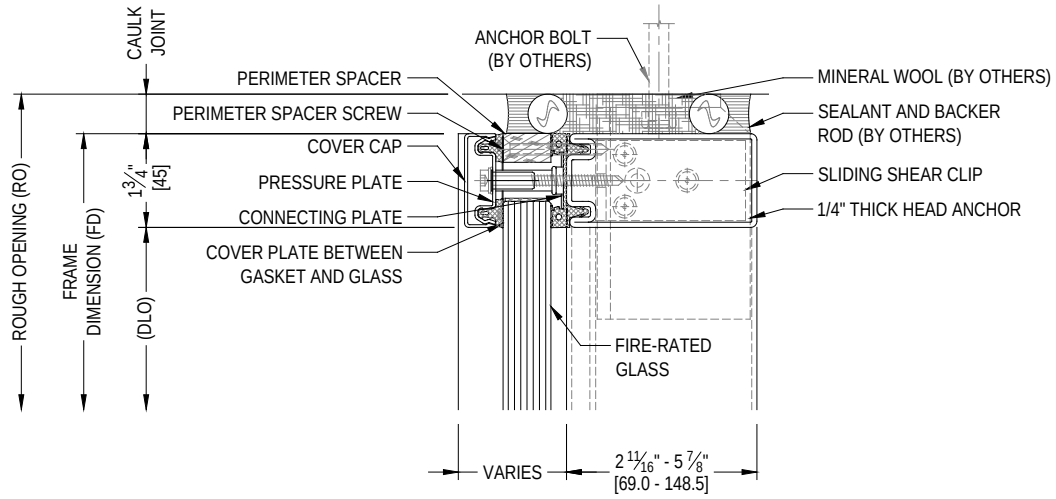

1 HEAD SECTION
INTERIOR APPLICATION

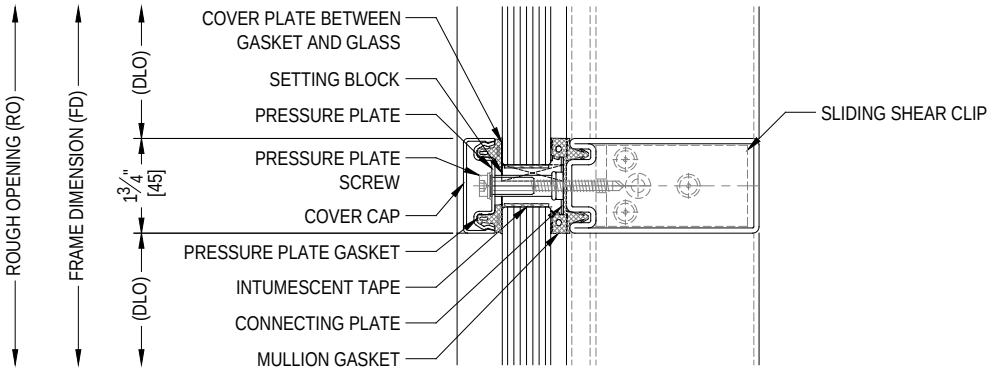

2 HORIZONTAL MULLION SECTION
INTERIOR APPLICATION

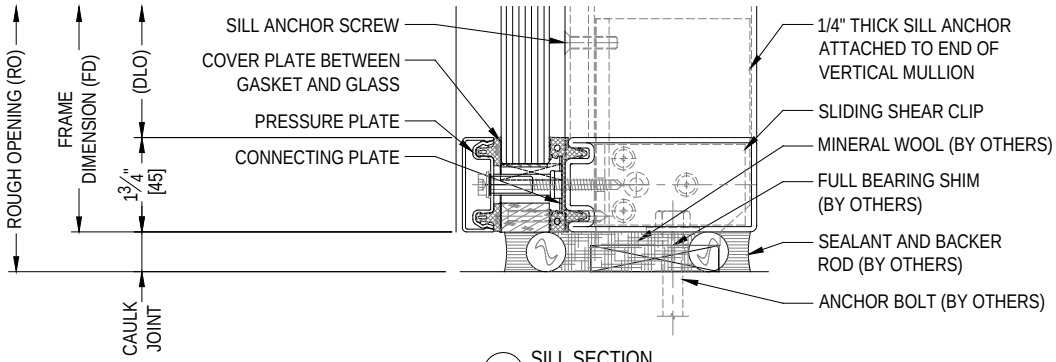

3 SILL SECTION
INTERIOR APPLICATION

45 mm System Interior Section Details

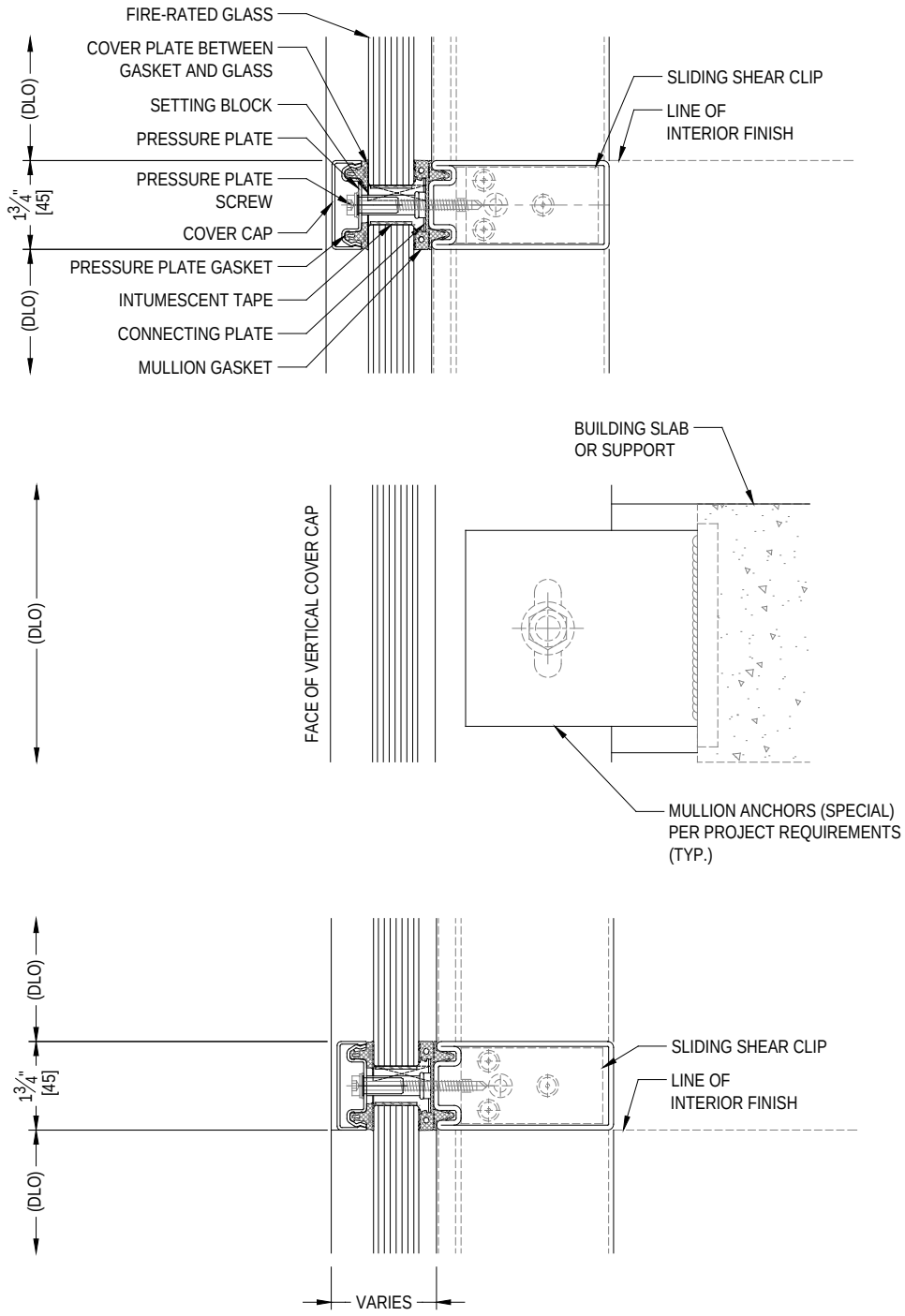

4 HORIZONTAL MULLION SECTION WITH MULLION ANCHOR AT SLAB EDGE
INTERIOR APPLICATION

45 mm System Interior Section Details

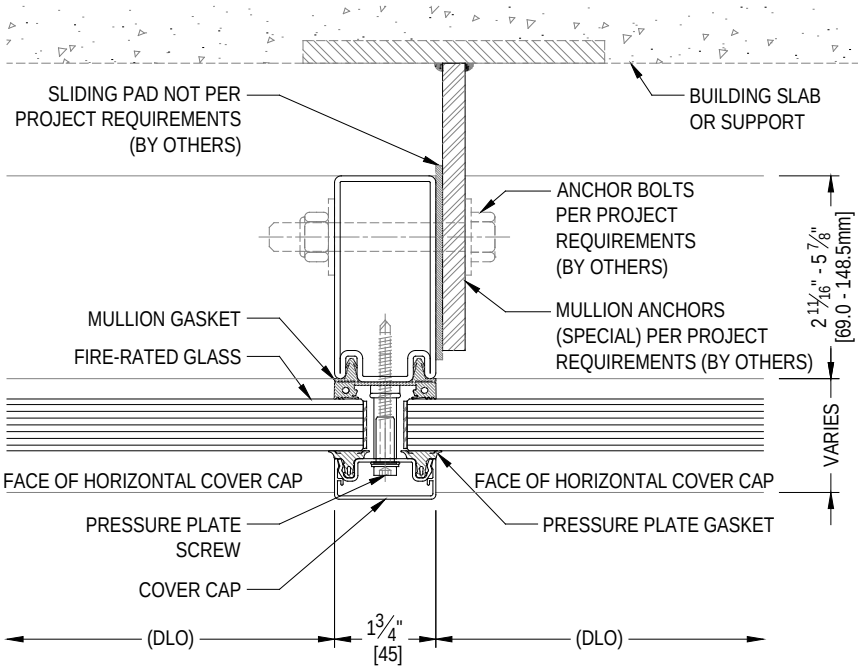

5 VERTICAL MULLION SECTION AT SLAB
INTERIOR APPLICATION

45 mm System Interior Section Details

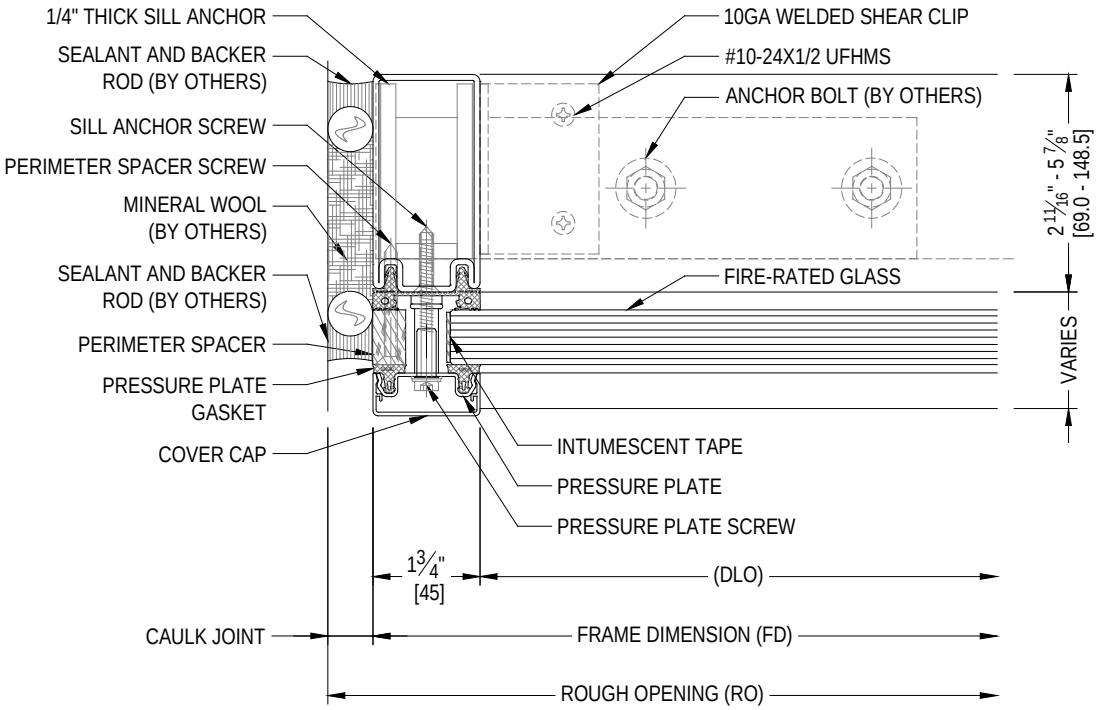

6 JAMB SECTION WITH WELDED SHEAR CLIP AT SILL
INTERIOR APPLICATION

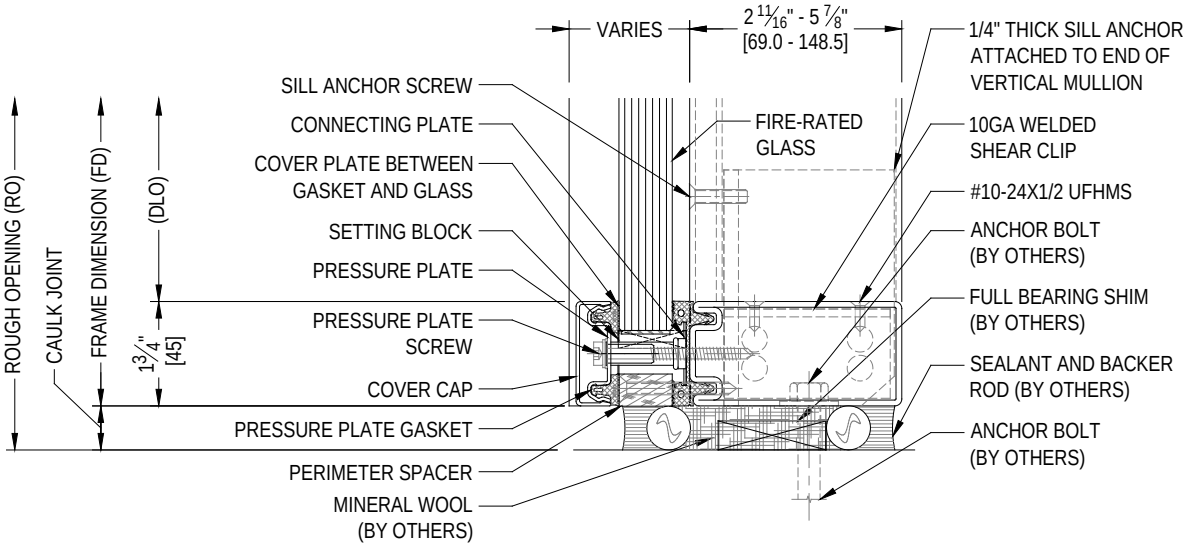

7 SILL SECTION WITH WELDED SHEAR CLIP
INTERIOR APPLICATION

45 mm System Interior Section Details

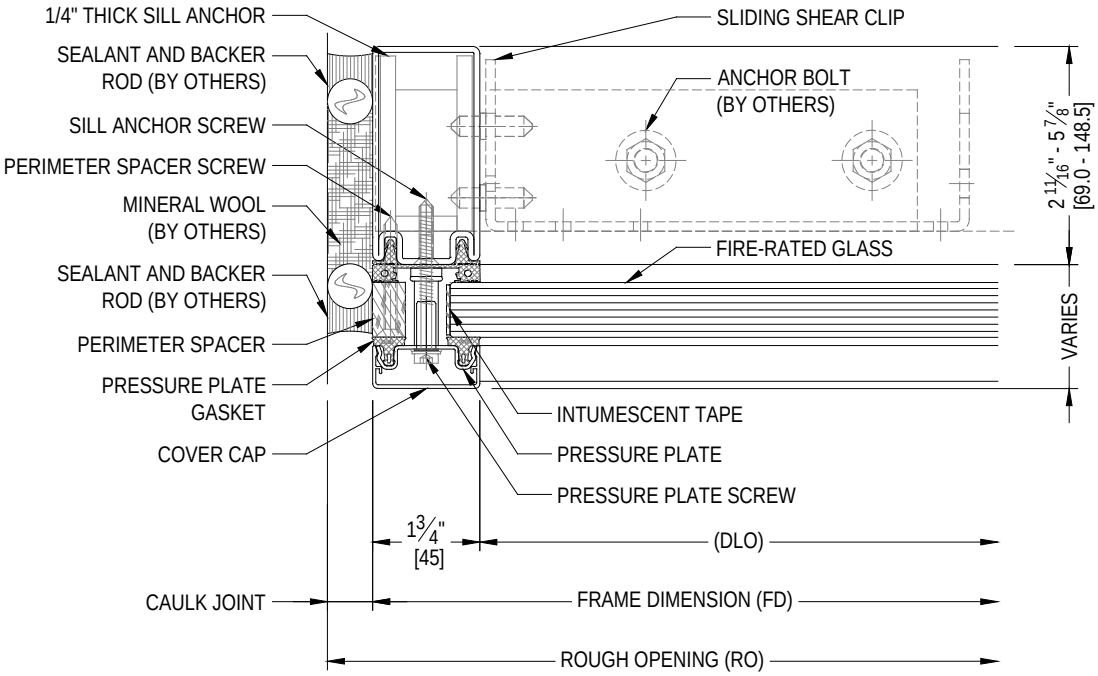

8 JAMB SECTION WITH SLIDING SHEAR CLIP AT SILL
INTERIOR APPLICATION

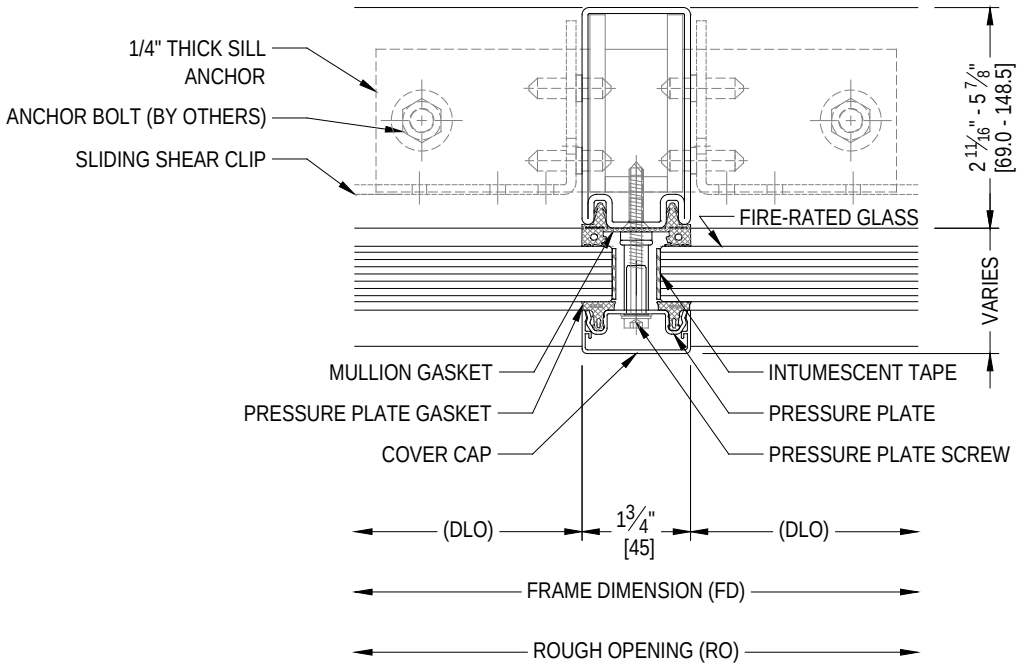

9 VERTICAL MULLION
INTERIOR APPLICATION

45 mm System Interior Section Details - Doors

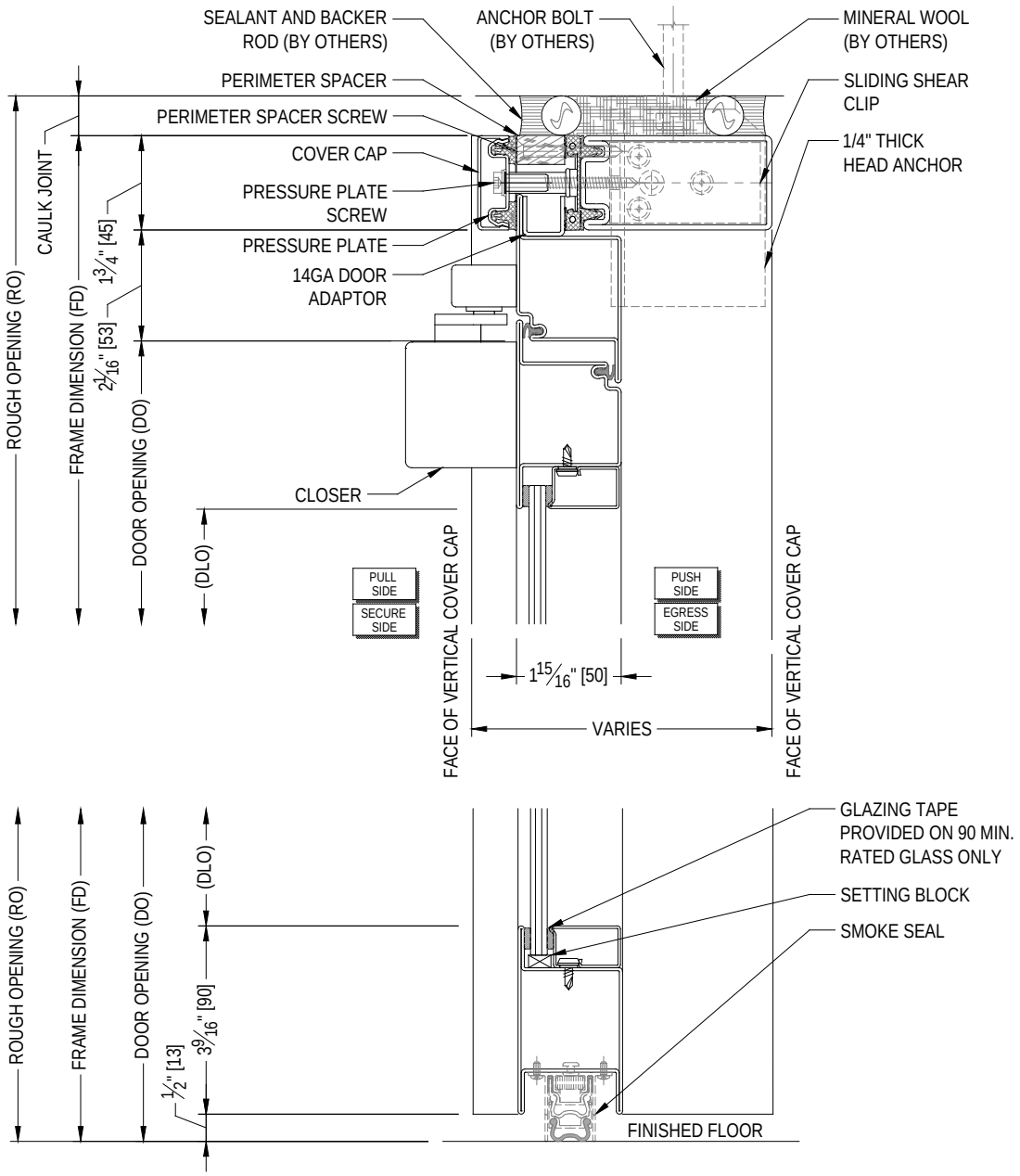

10 HORIZONTAL MULLION, DOOR HEADER, AND BOTTOM RAIL
INTERIOR APPLICATION

45 mm System Interior Section Details - Doors

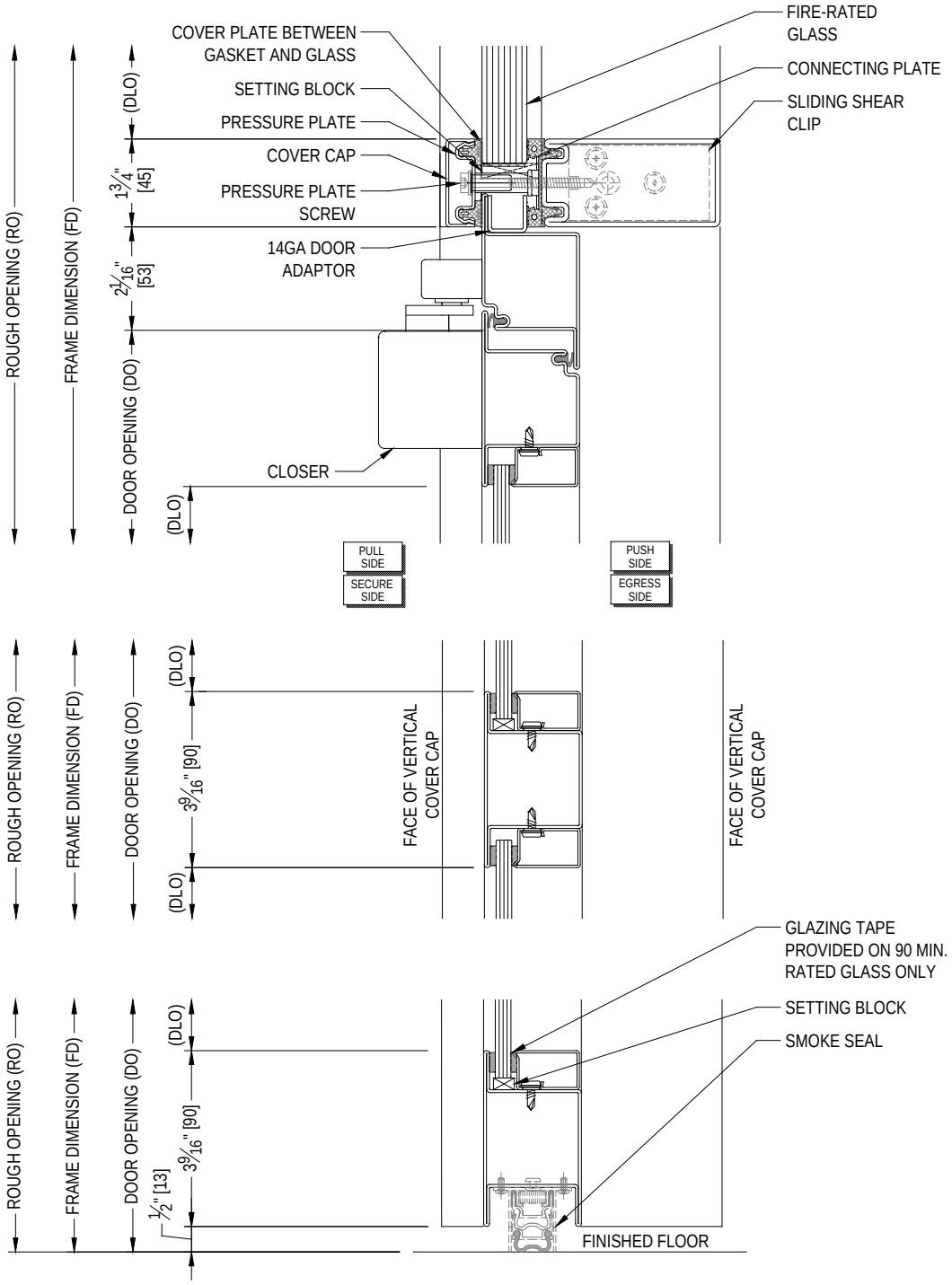

11 DOOR HEADER WITH TRANSOM, DOOR MID RAIL, AND BOTTOM RAIL
INTERIOR APPLICATION

45 mm System Interior Section Details - Doors

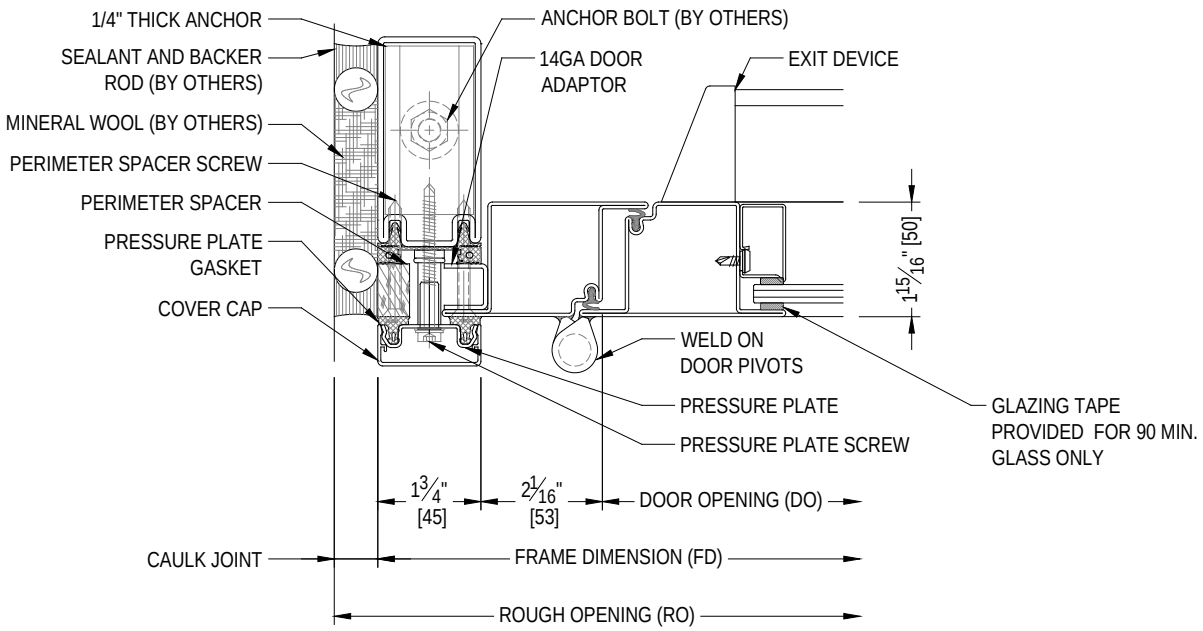

12 VERTICAL MULLION WITH DOOR JAMB AT PIVOT
INTERIOR APPLICATION

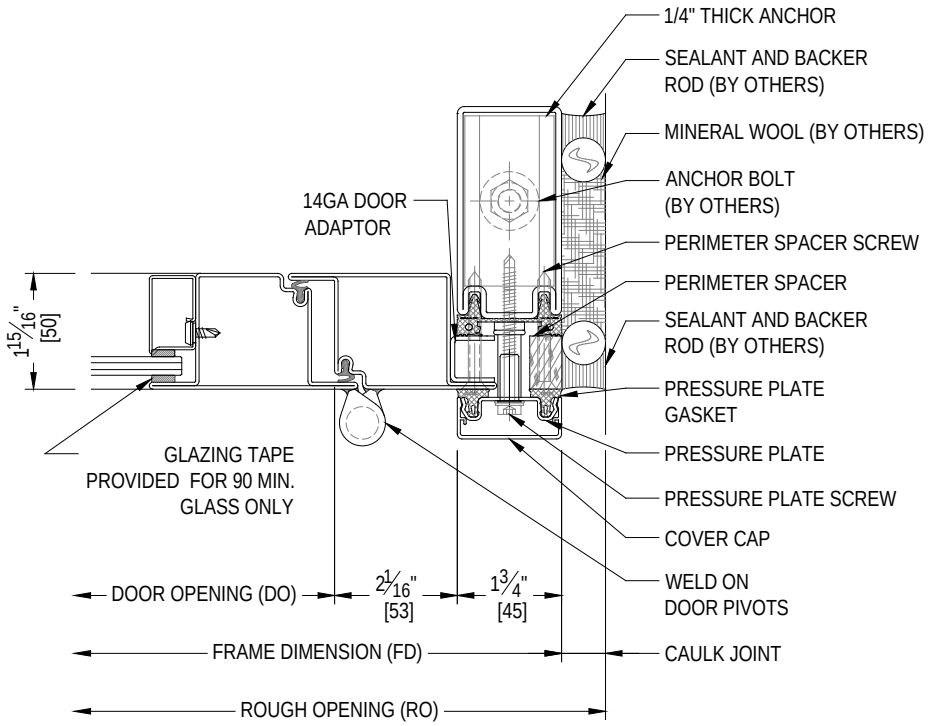

13 VERTICAL MULLION WITH DOOR JAMB AT PIVOT
INTERIOR APPLICATION

45 mm System Interior Section Details - Doors

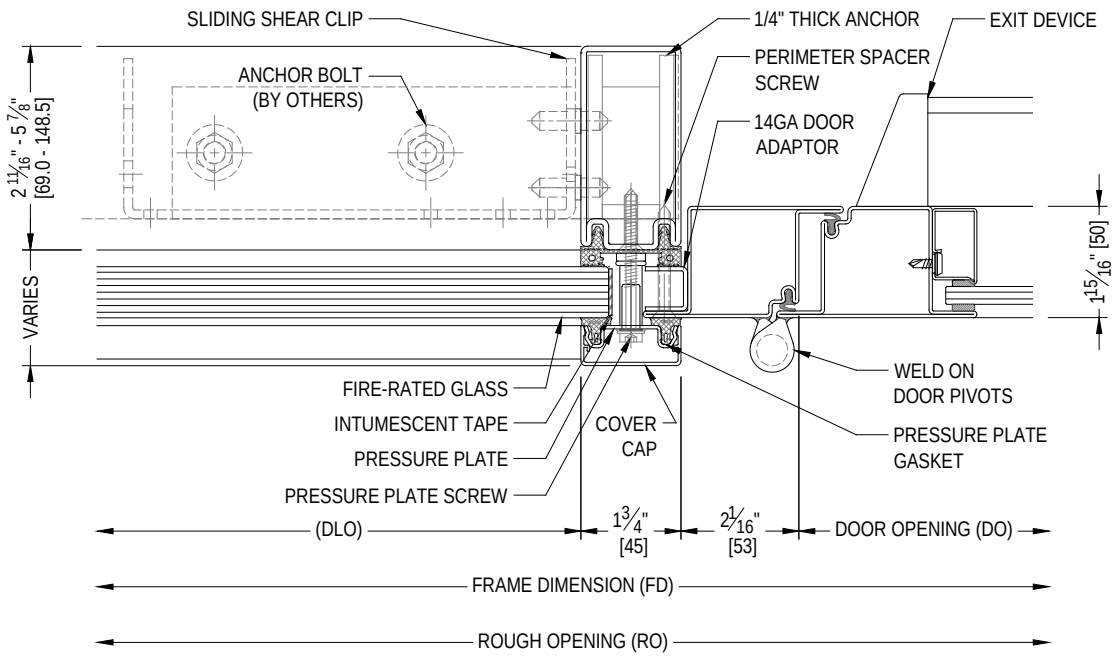

14 VERTICAL MULLION WITH SIDELITE DOOR JAMB AT PIVOT
INTERIOR APPLICATION

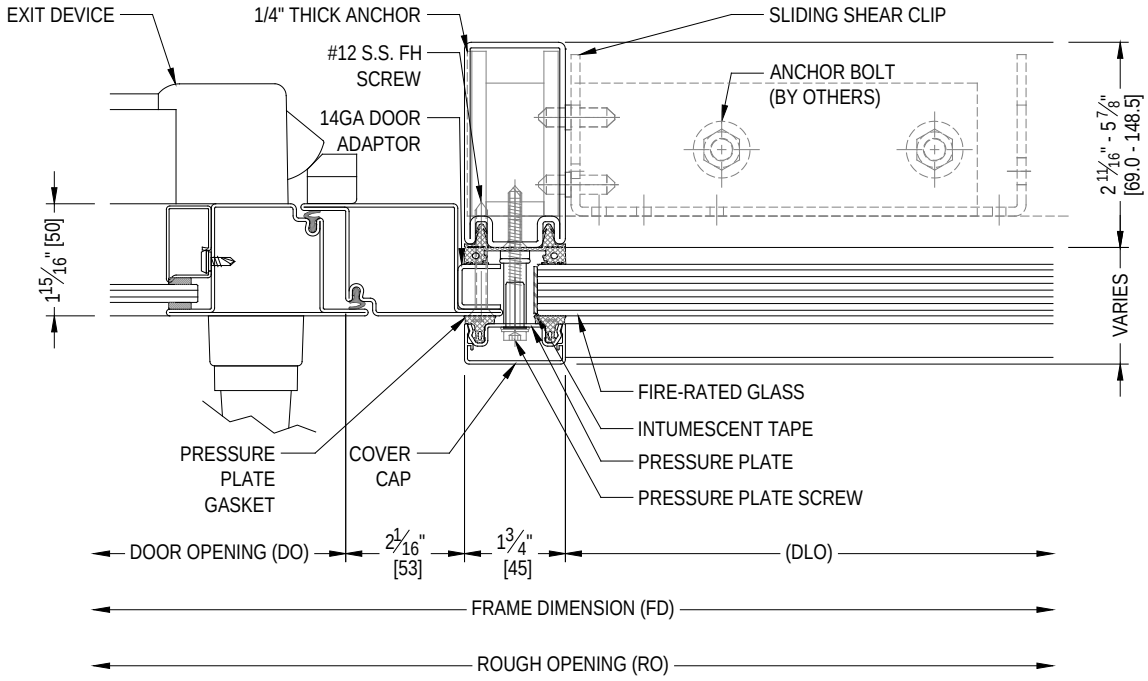

15 VERTICAL MULLION WITH SIDELITE DOOR JAMB AT LEVER
INTERIOR APPLICATION

45 mm System Exterior Section Details

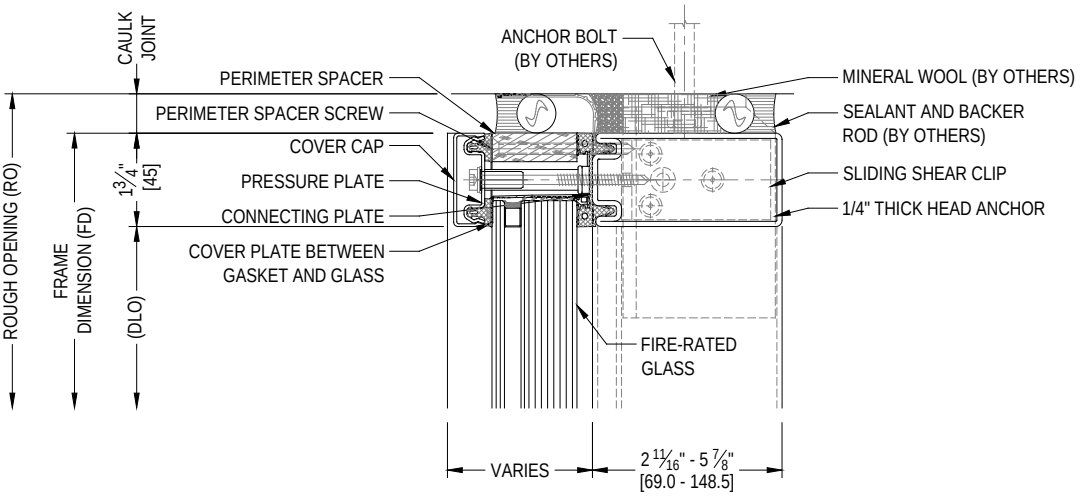

16 HEAD SECTION
EXTERIOR APPLICATION

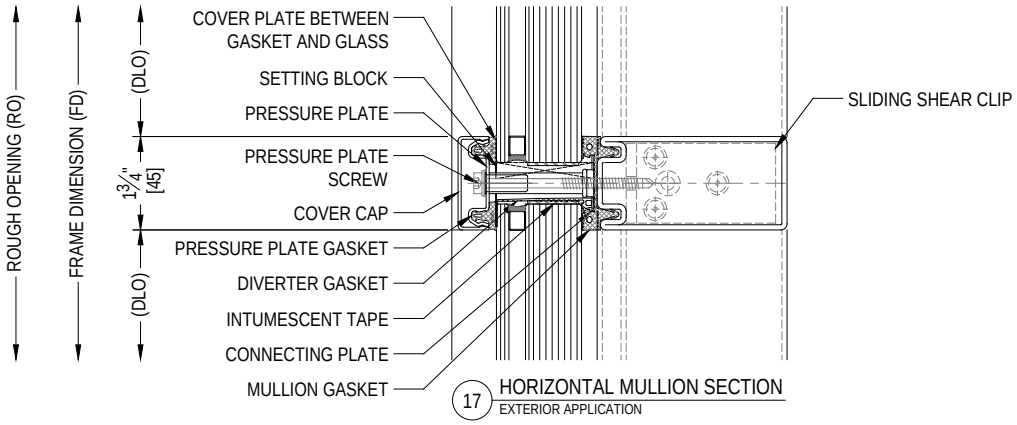

17 HORIZONTAL MULLION SECTION
EXTERIOR APPLICATION

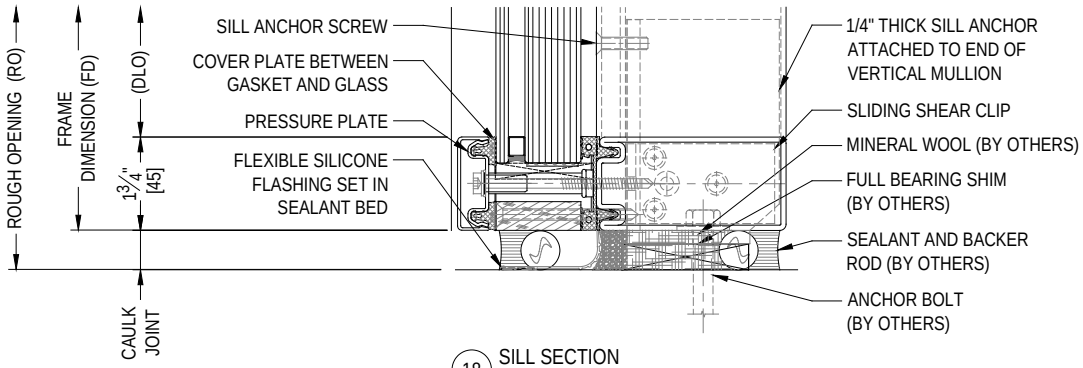

18 SILL SECTION
EXTERIOR APPLICATION

45 mm System Exterior Section Details

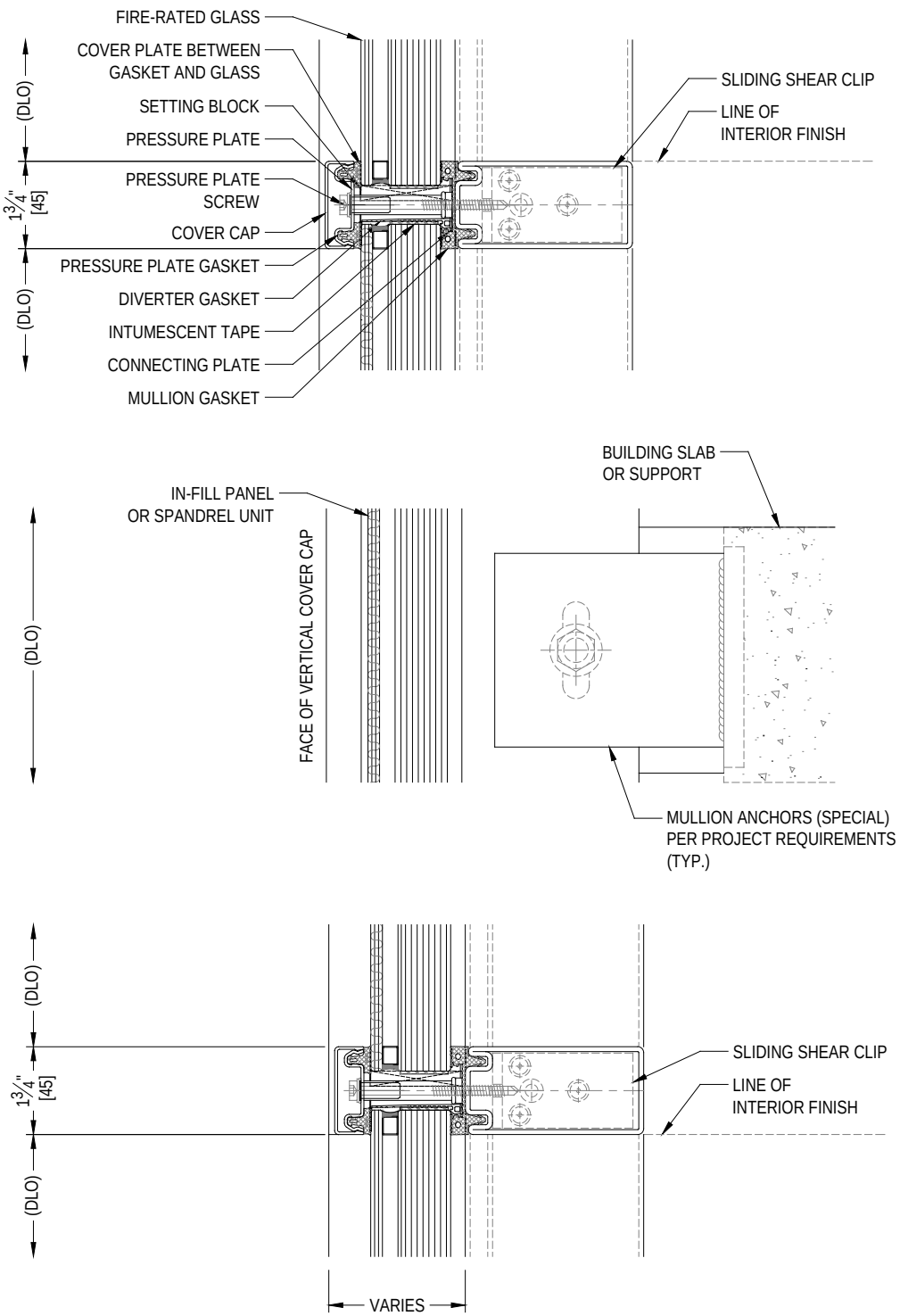

19 HORIZONTAL MULLION SECTION WITH MULLION ANCHOR AT SLAB EDGE
EXTERIOR APPLICATION

45 mm System Exterior Section Details

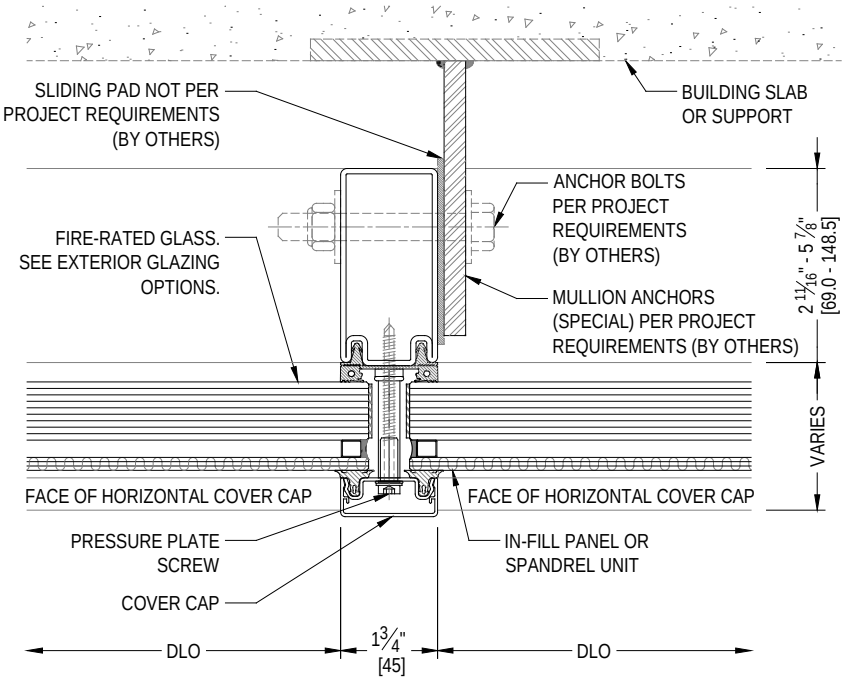

20 VERTICAL MULLION SECTION AT SLAB
EXTERIOR APPLICATION

45 mm System Exterior Section Details

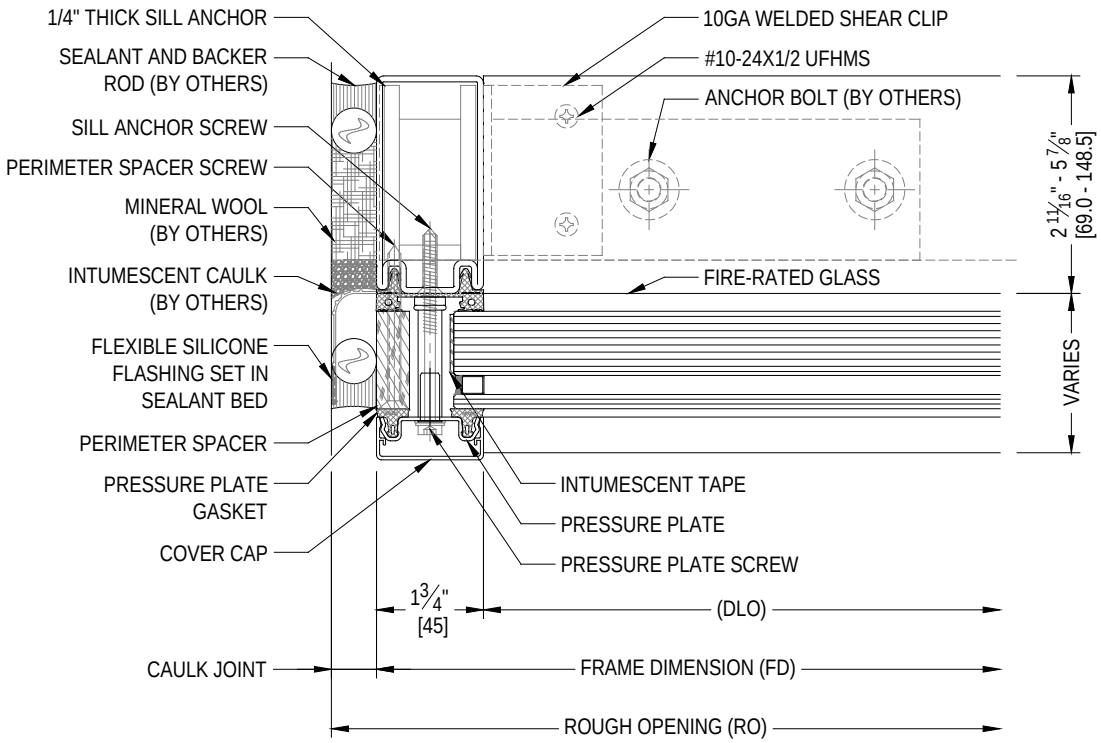

21 JAMB SECTION WITH WELDED SHEAR CLIP AT SILL
EXTERIOR APPLICATION

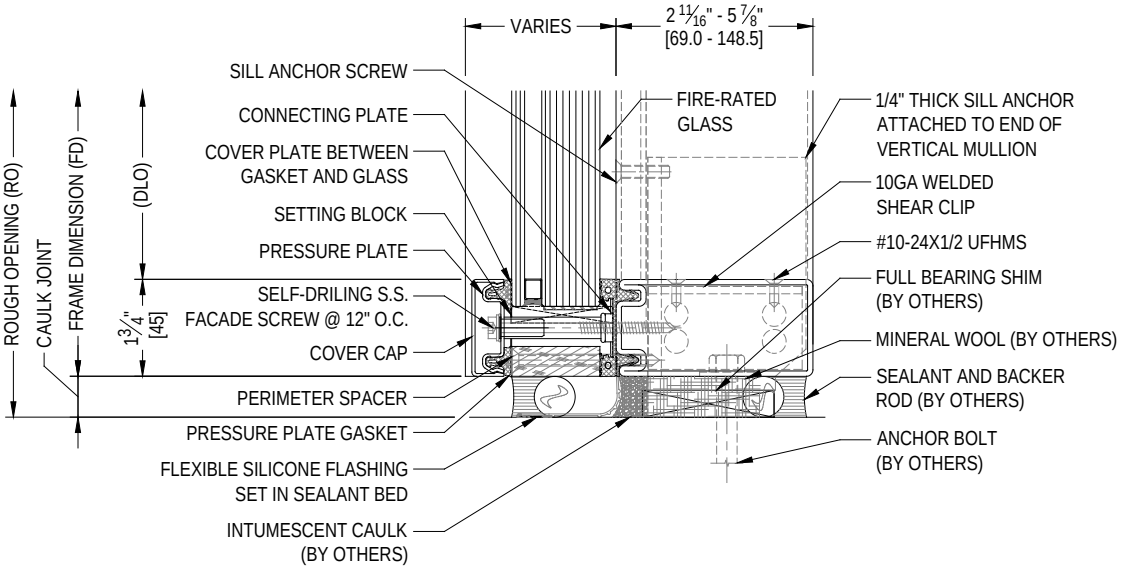

22 SILL SECTION WITH WELDED SHEAR CLIP
EXTERIOR APPLICATION

45 mm System Exterior Section Details

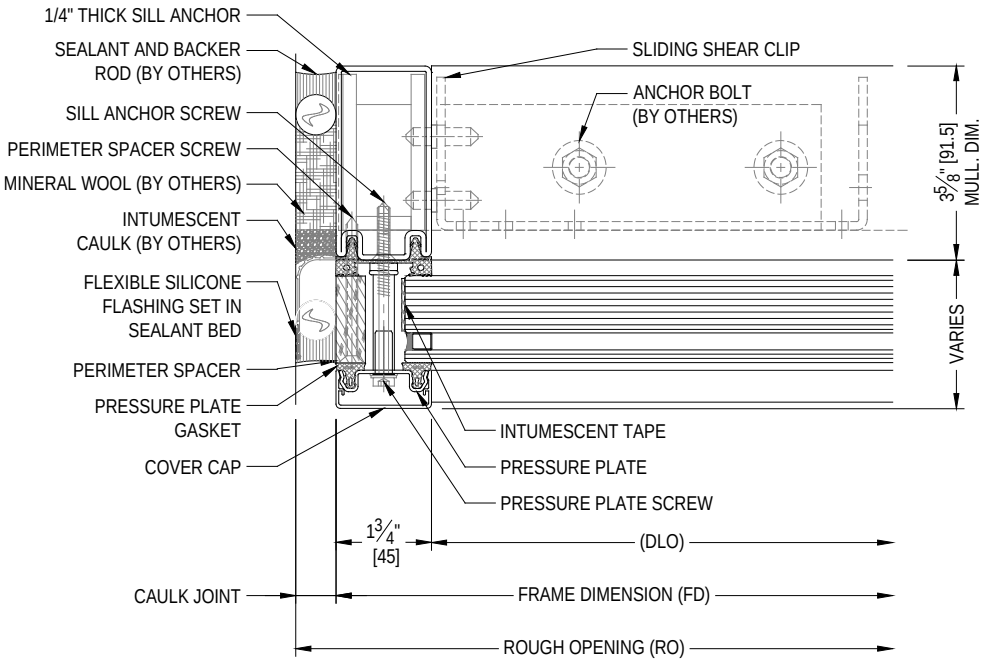

23 JAMB SECTION WITH SLIDING SHEAR CLIP AT SILL
EXTERIOR APPLICATION

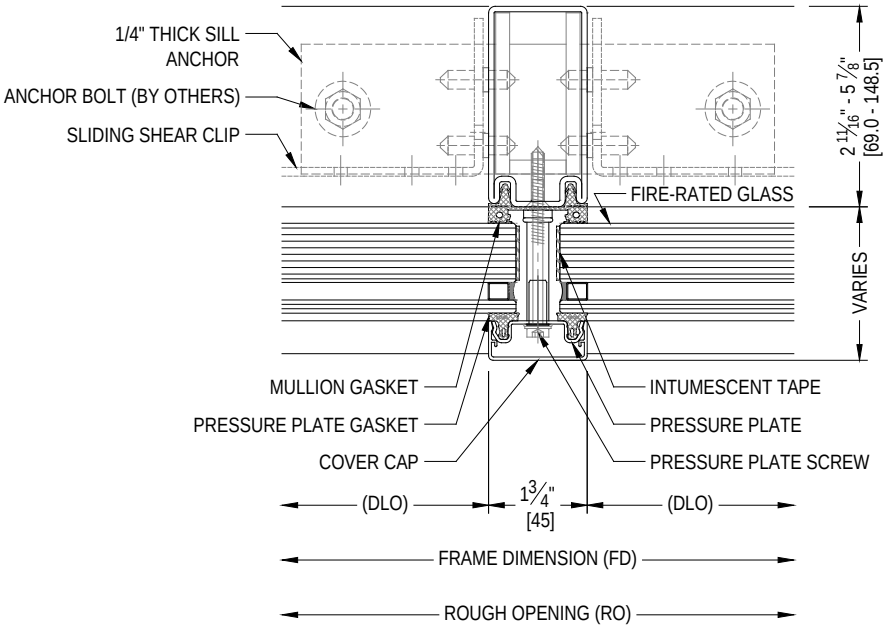

24 VERTICAL MULLION
EXTERIOR APPLICATION

45 mm System Exterior Section Details - Doors

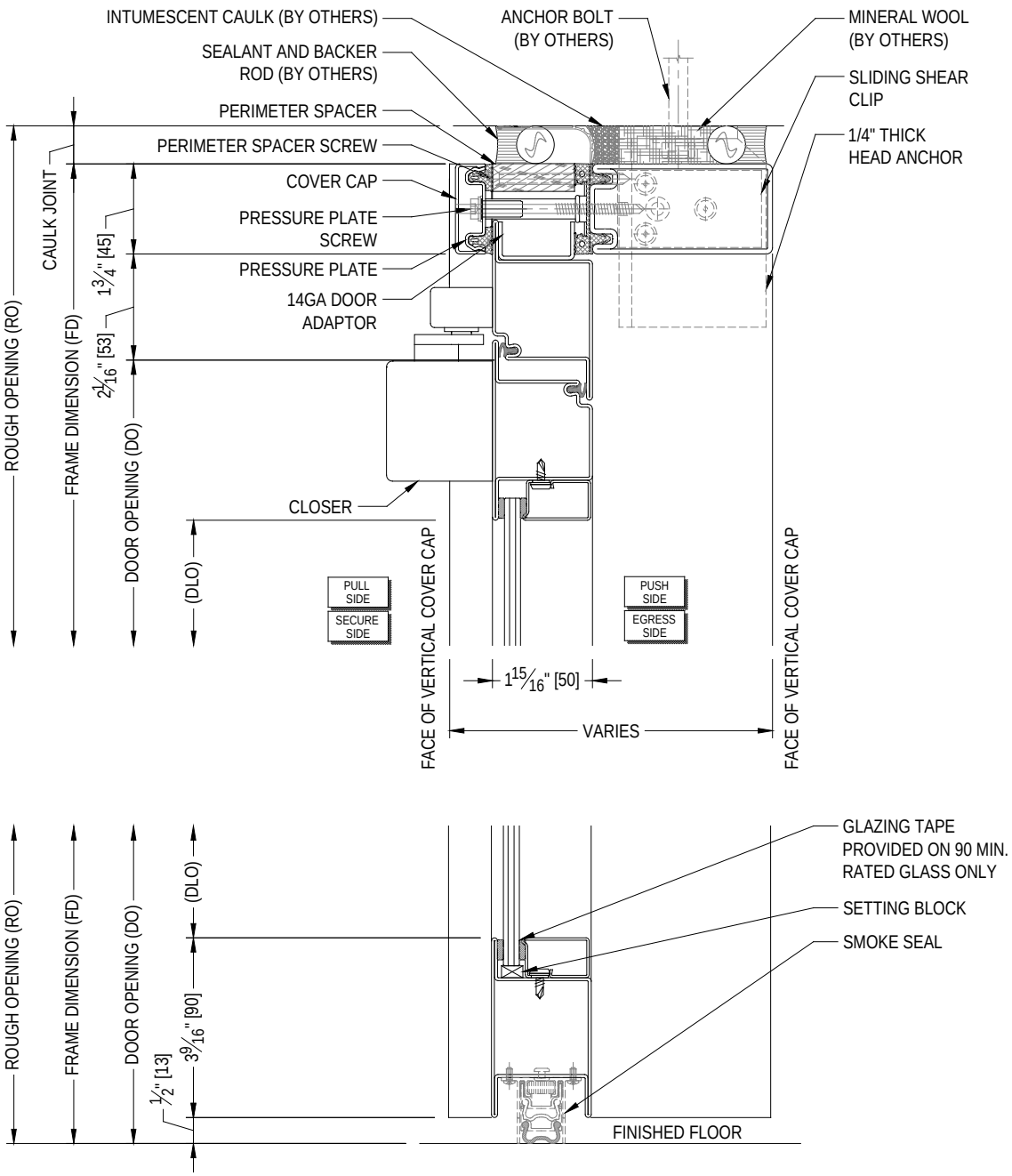

25 HORIZONTAL MULLION, DOOR HEADER, AND BOTTOM RAIL
EXTERIOR APPLICATION

45 mm System Exterior Section Details - Doors

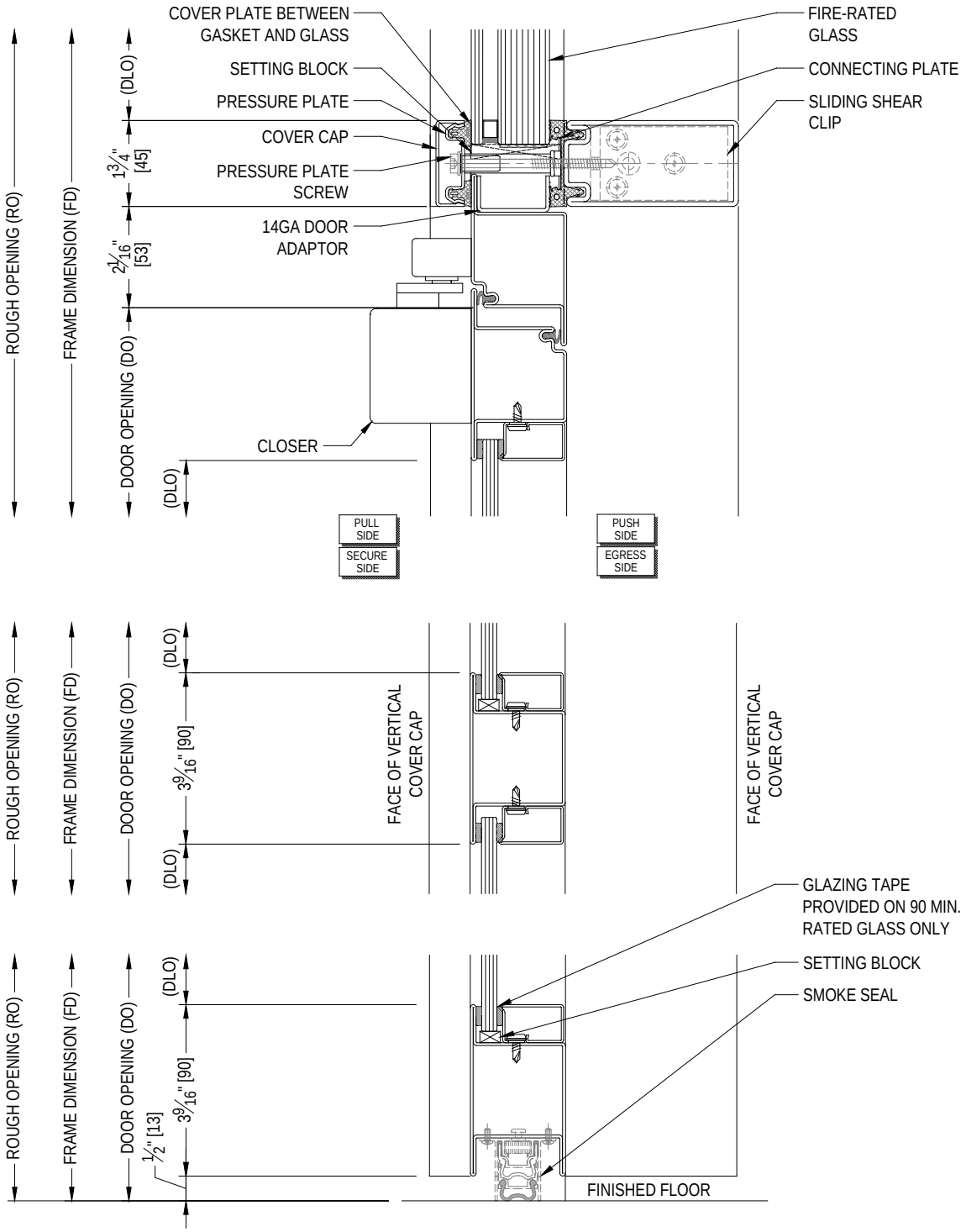

26 DOOR HEADER WITH TRANSOM, DOOR MID RAIL, AND BOTTOM RAIL
EXTERIOR APPLICATION

45 mm System Exterior Section Details - Doors

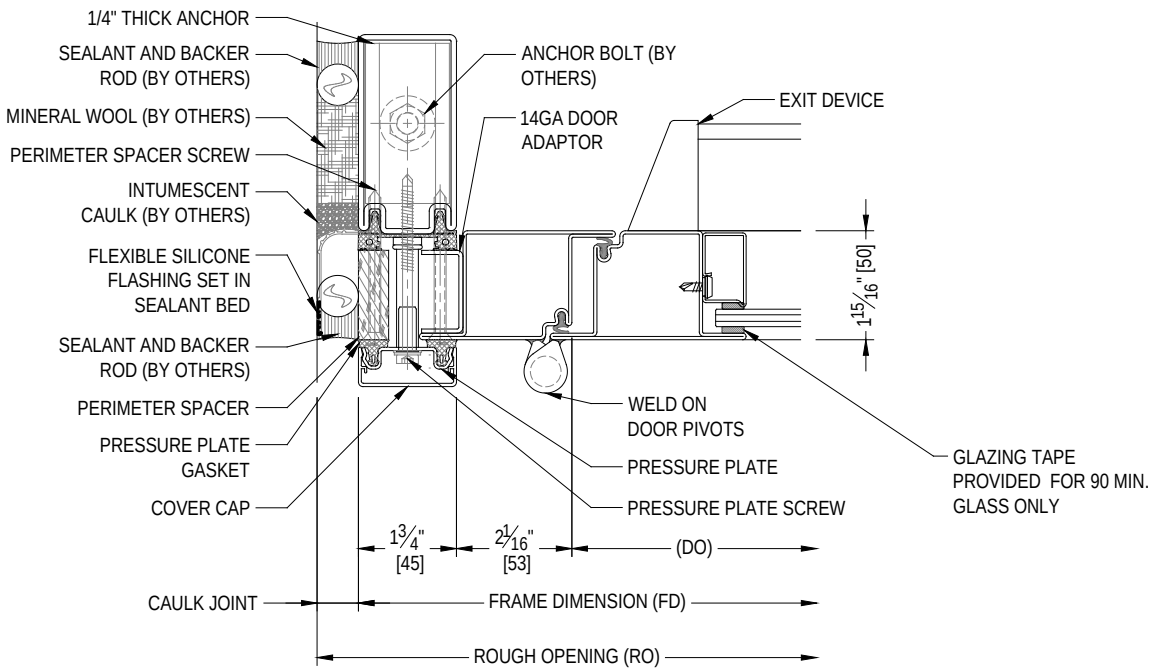

27 VERTICAL MULLION WITH DOOR JAMB AT PIVOT
EXTERIOR APPLICATION

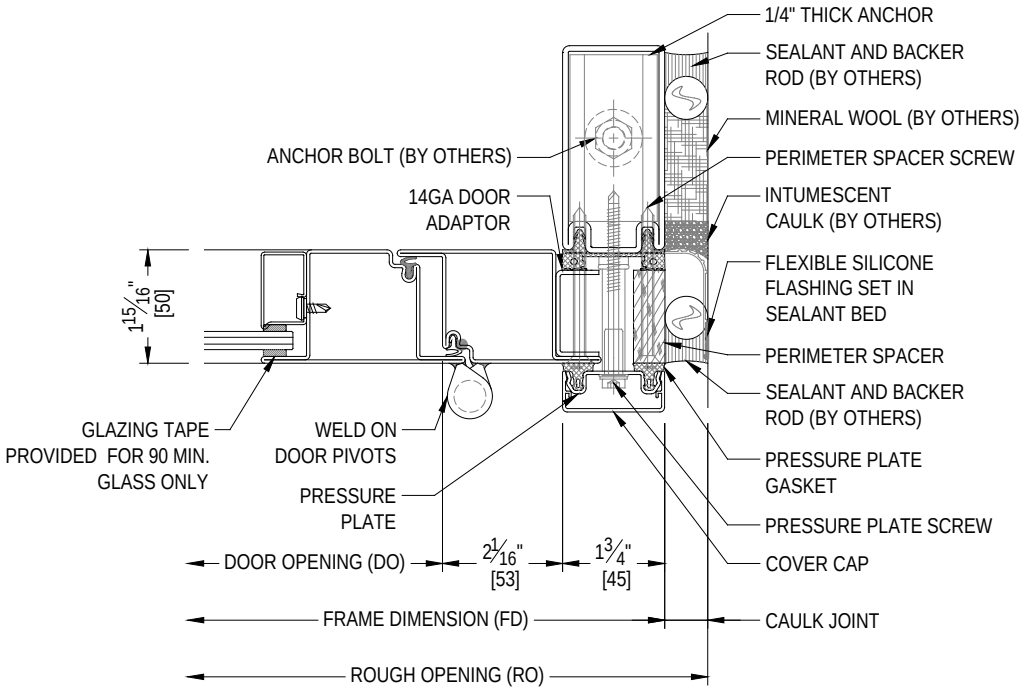

28 VERTICAL MULLION WITH DOOR JAMB AT PIVOT
EXTERIOR APPLICATION

45 mm System Exterior Section Details - Doors

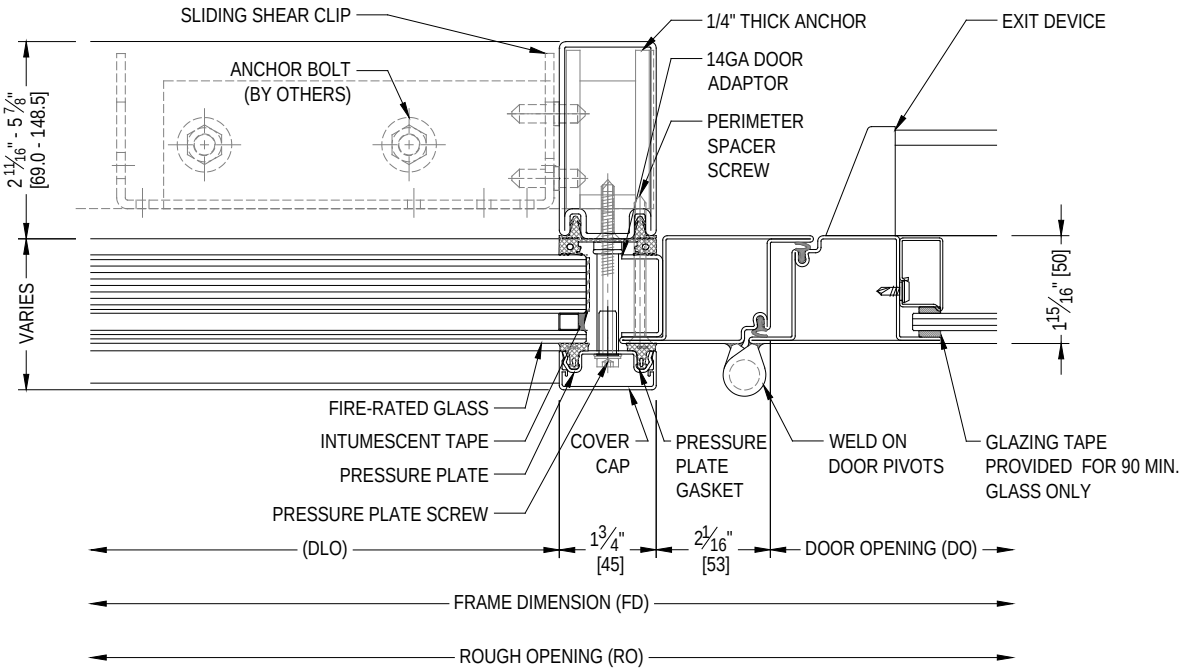

29 VERTICAL MULLION WITH SIDELITE DOOR JAMB AT PIVOT
EXTERIOR APPLICATION

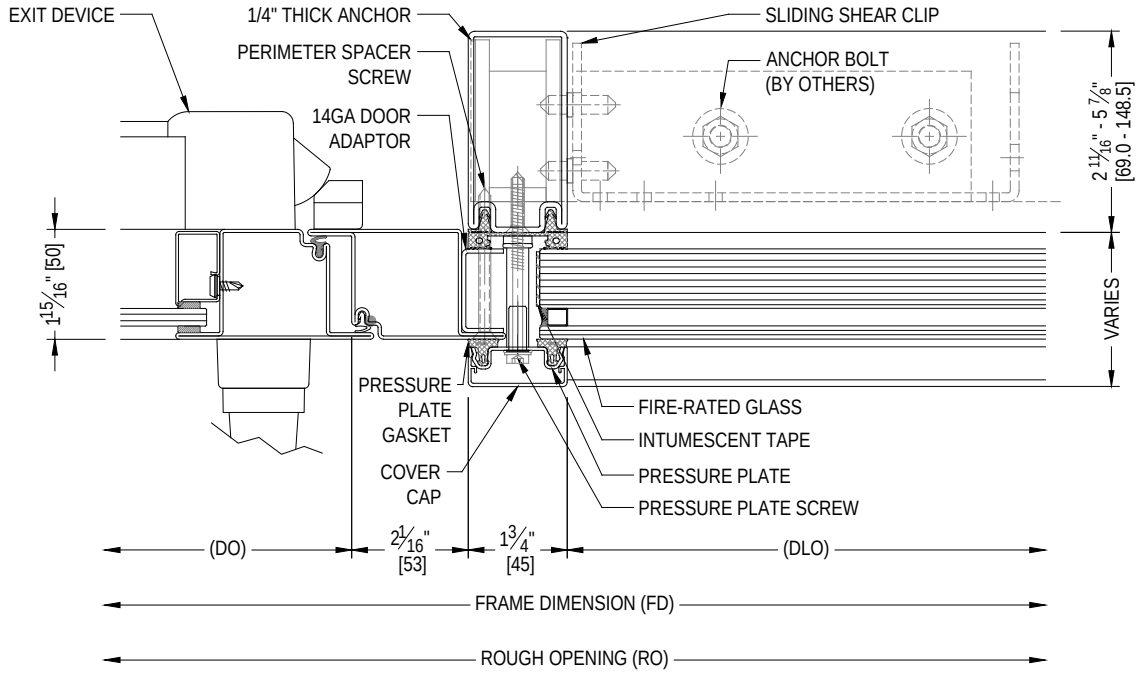

30 VERTICAL MULLION WITH SIDELITE DOOR JAMB AT LEVER
EXTERIOR APPLICATION

60 mm System Profile Options

60 mm MULLION PROFILE OPTIONS

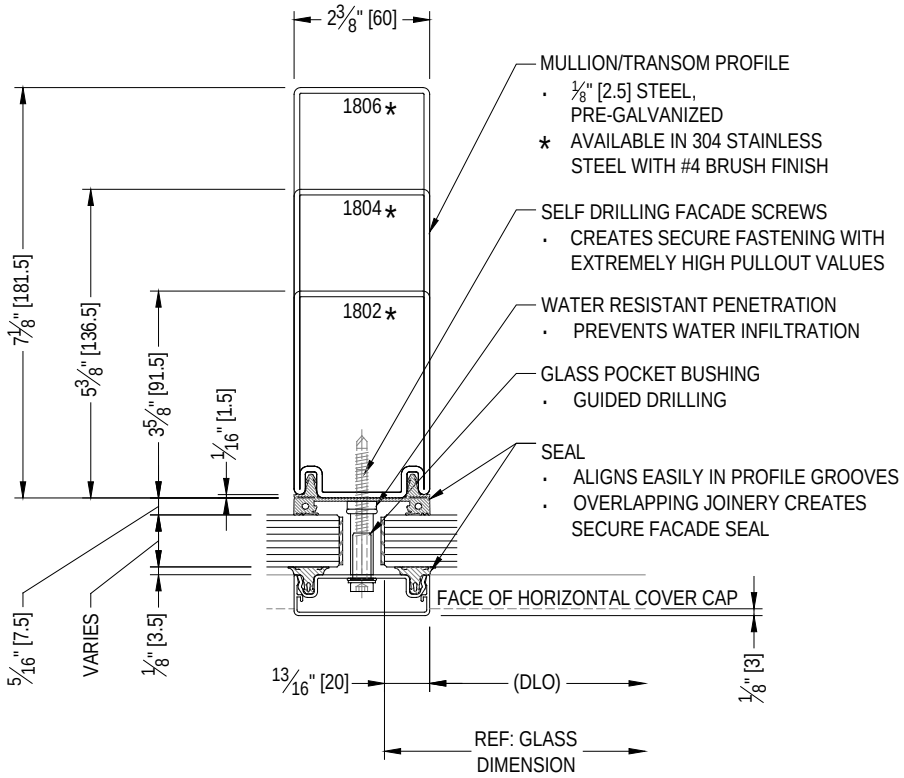

PRESSURE PLATE AND GASKET

STAINLESS STEEL

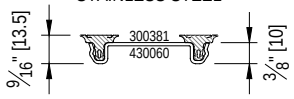

COVER CAP, PRESSURE PLATE AND GASKET

STAINLESS STEEL COVER CAPS

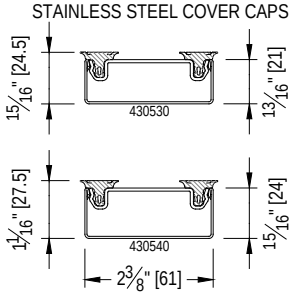

ALUMINUM COVER CAPS

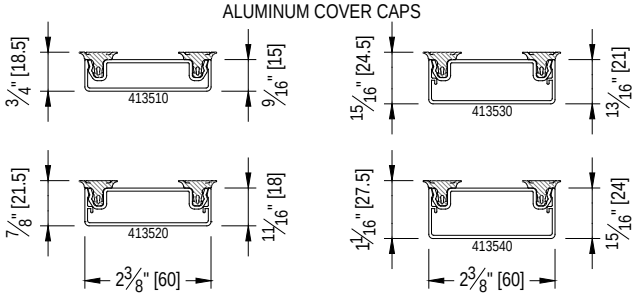

60 mm System Elevations

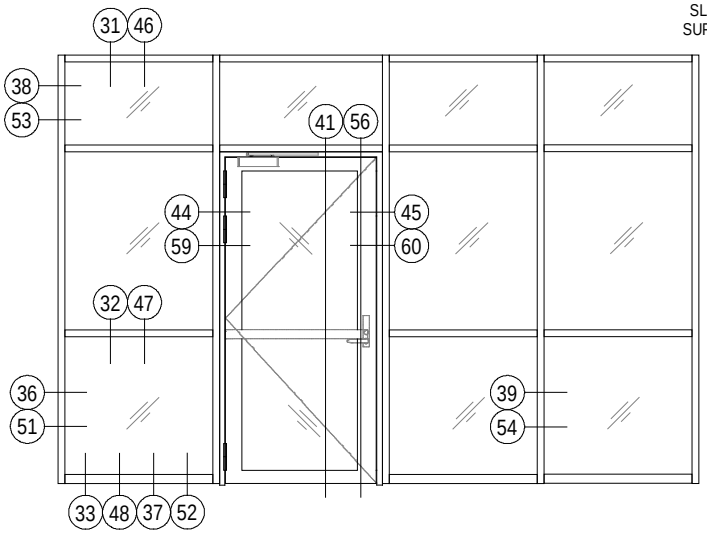

E WINDOW AND SINGLE DESIGNER SERIES DOOR
60 MM SYSTEM

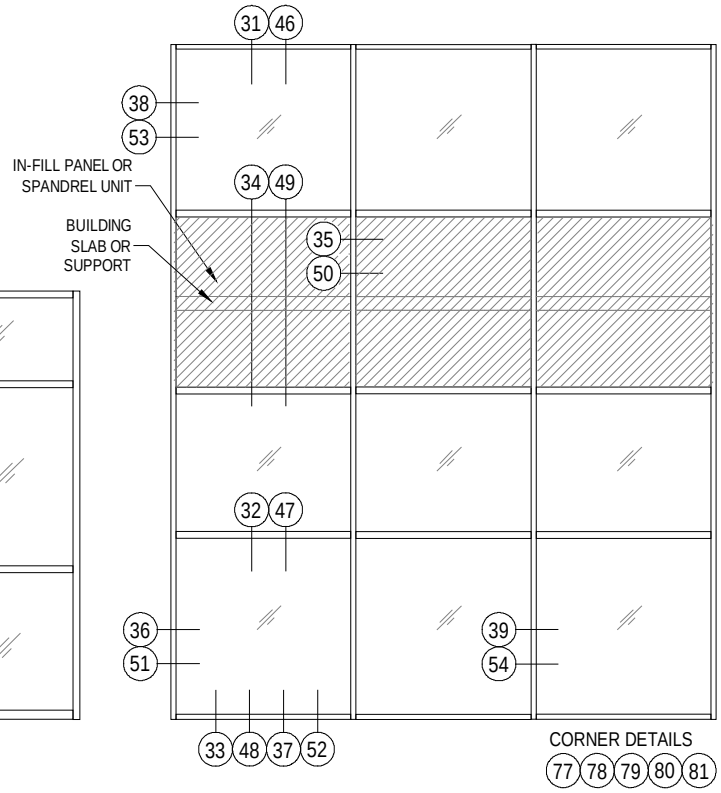

F WINDOW
60 MM SYSTEM

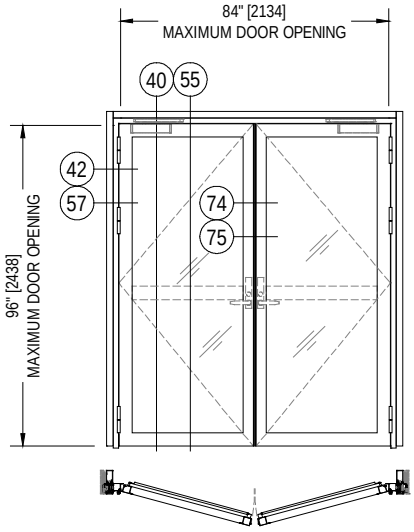

G ACTIVE / ACTIVE DESIGNER SERIES DOOR
60 MM SYSTEM

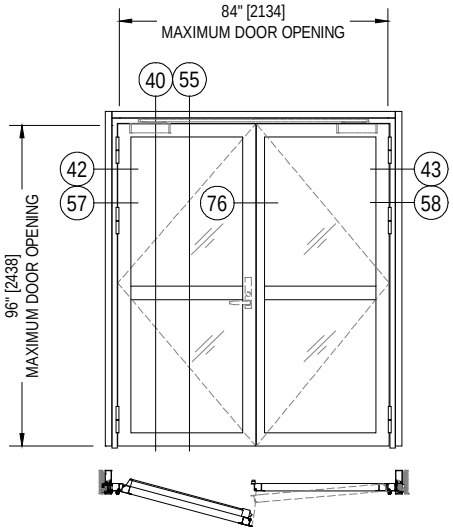

H ACTIVE / FIXED DESIGNER SERIES DOOR
60 MM SYSTEM

60 mm System Elevations

Hurricane Application

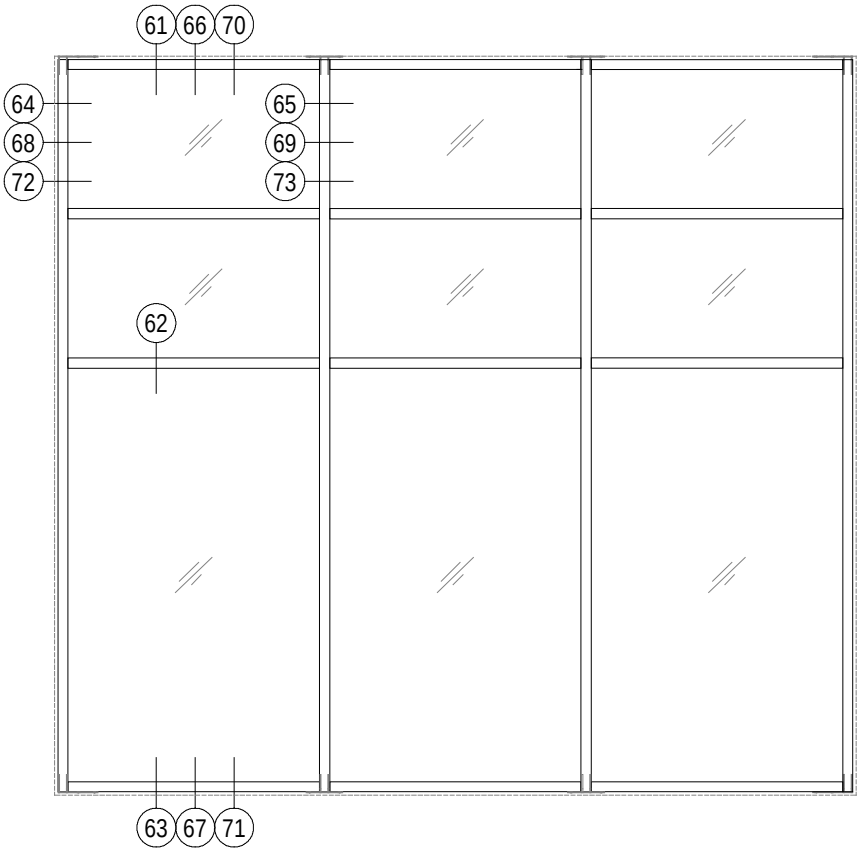

I CURTAINWALL HURRICANE WINDOW
60 MM SYSTEM

60 mm System Interior Section Details

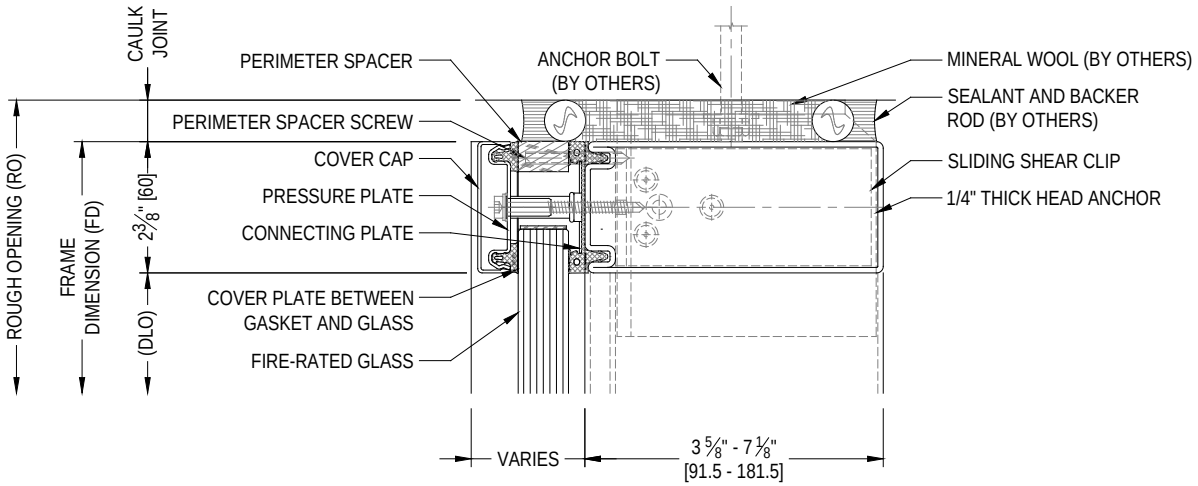

31 HEAD SECTION
INTERIOR APPLICATION

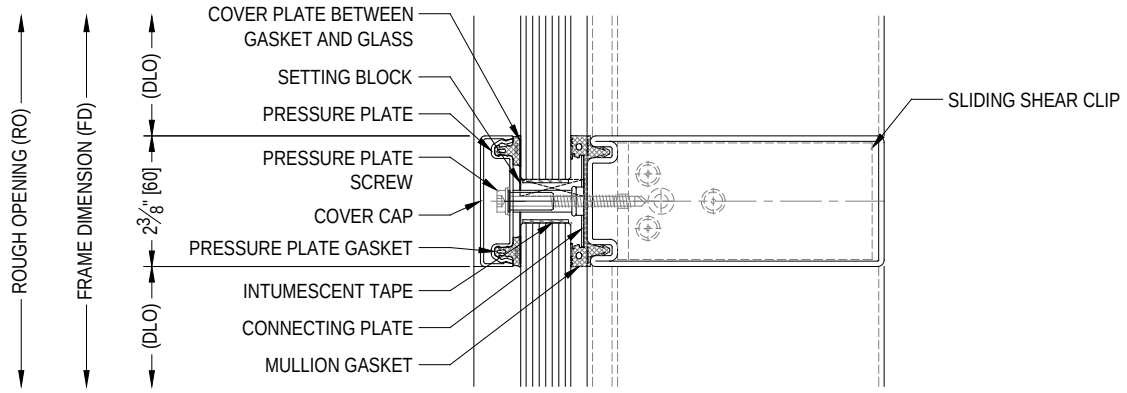

32 HORIZONTAL MULLION SECTION
INTERIOR APPLICATION

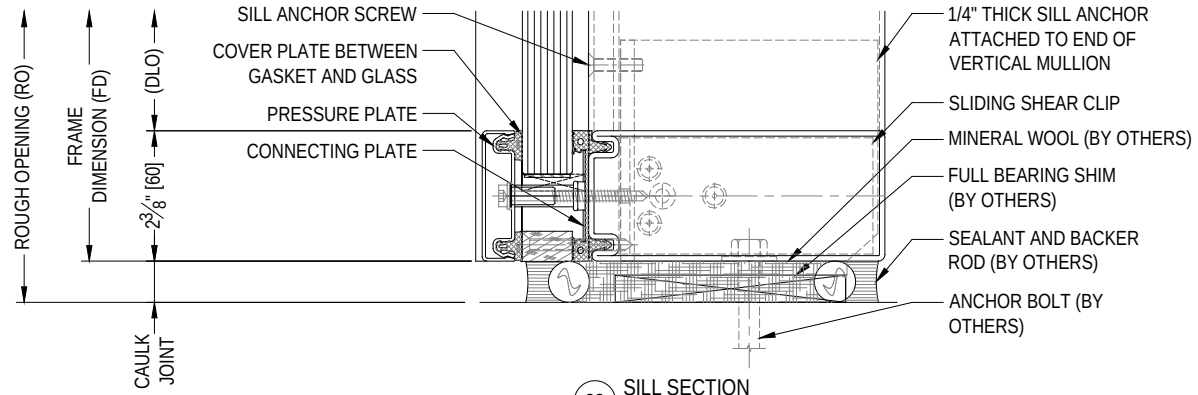

33 SILL SECTION
INTERIOR APPLICATION

60 mm System Interior Section Details

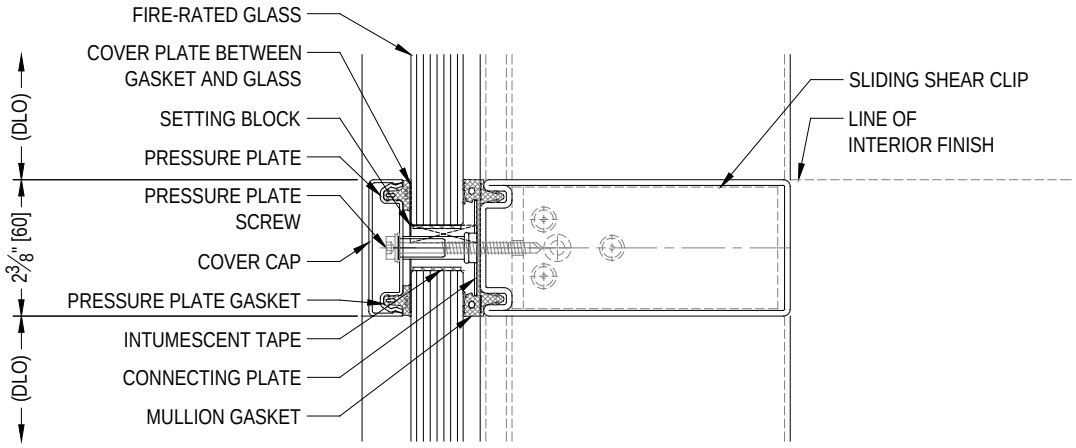

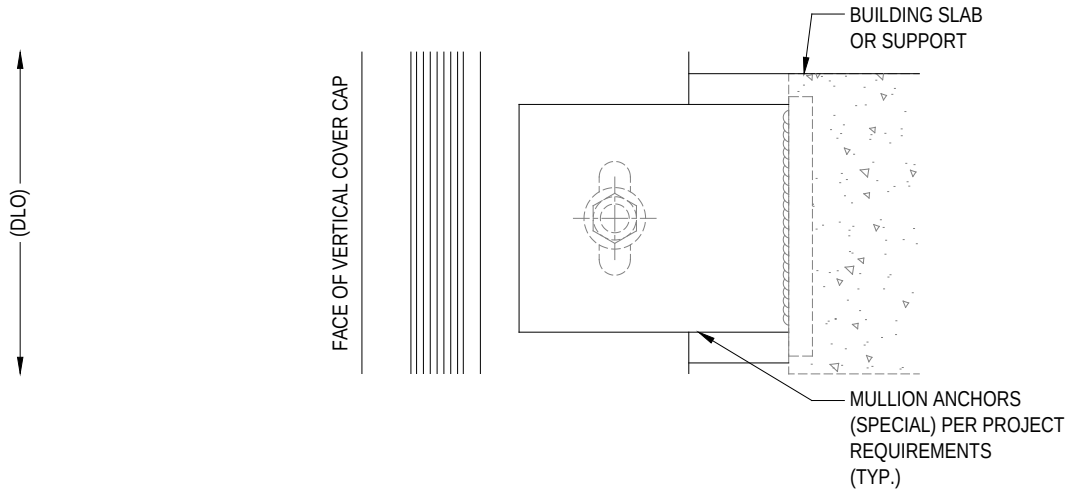

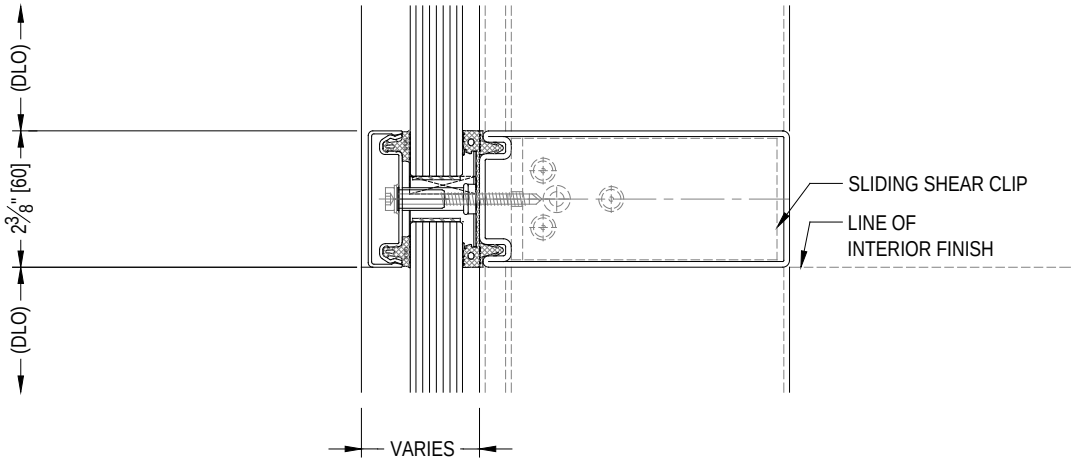

34 HORIZONTAL MULLION SECTION WITH MULLION ANCHOR AT SLAB EDGE
INTERIOR APPLICATION

60 mm System Interior Section Details

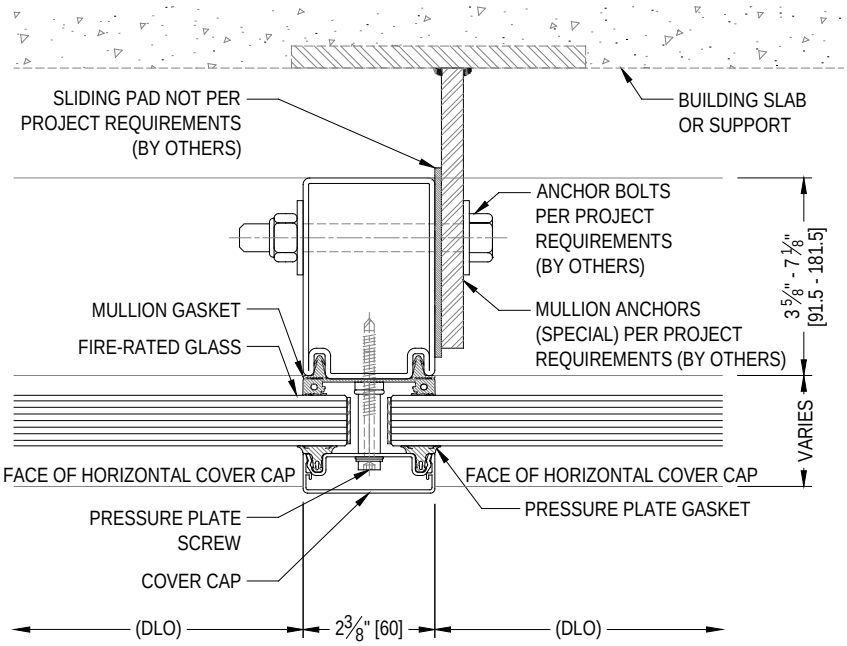

35 VERTICAL MULLION SECTION AT SLAB
INTERIOR APPLICATION

60 mm System Interior Section Details

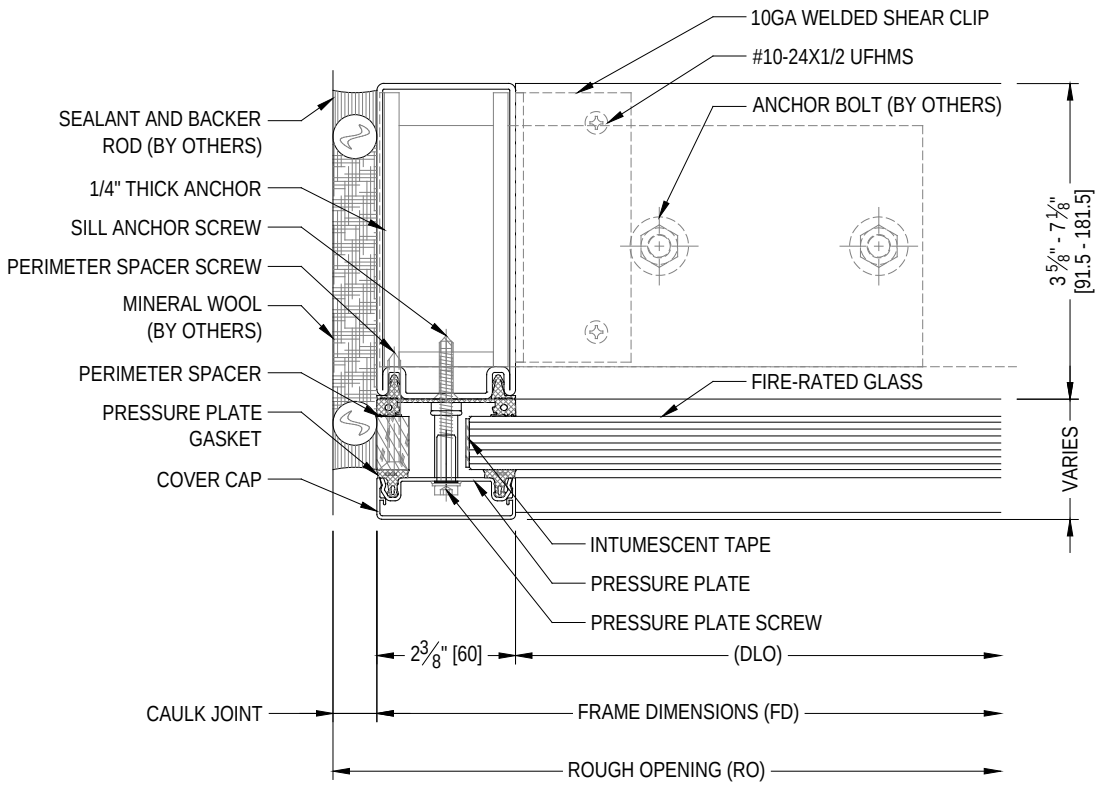

36 JAMB SECTION WITH WELDED SHEAR CLIP AT SILL
INTERIOR APPLICATION

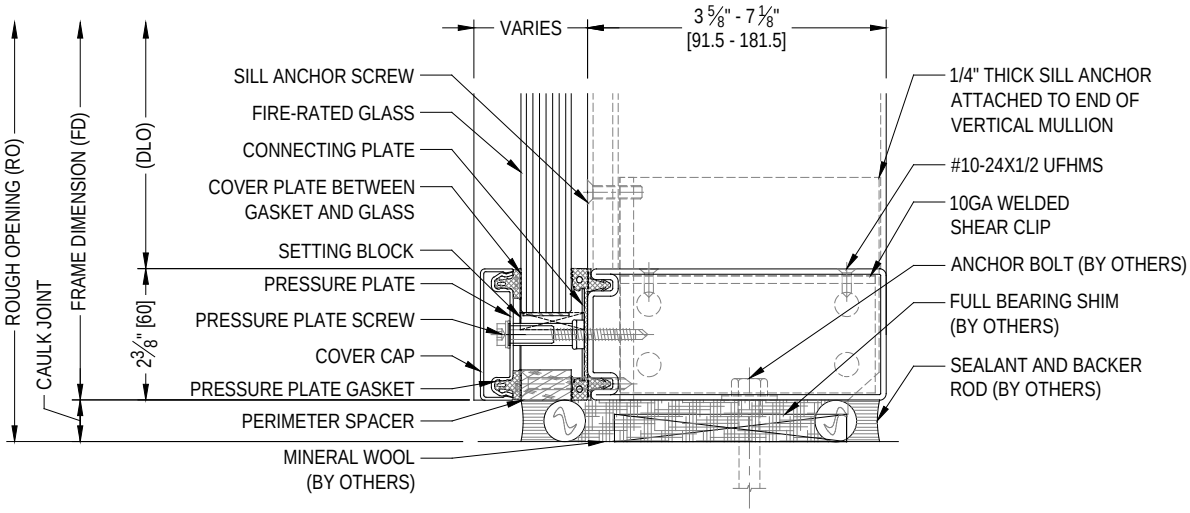

37 SILL SECTION WITH WELDED SHEAR CLIP
INTERIOR APPLICATION

60 mm System Interior Section Details

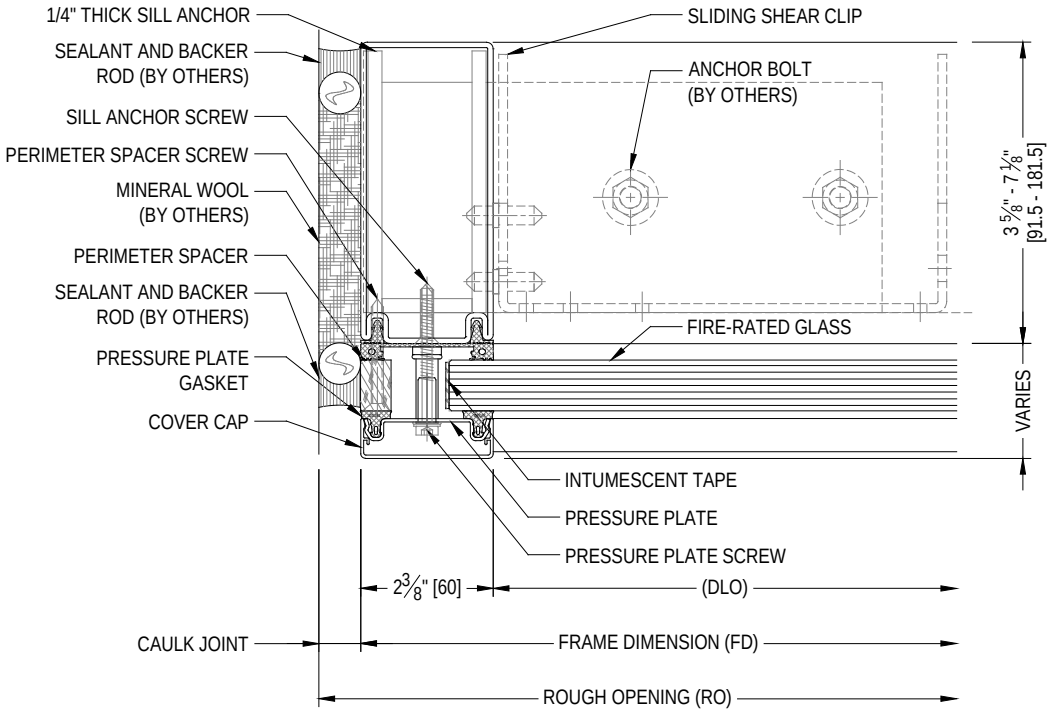

38 JAMB SECTION WITH SLIDING SHEAR CLIP AT SILL
INTERIOR APPLICATION

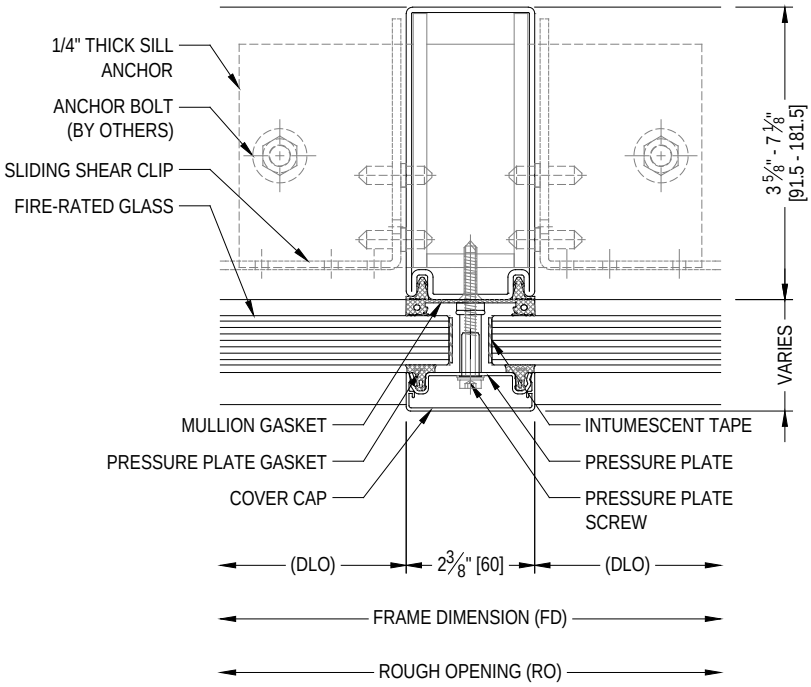

39 VERTICAL MULLION
INTERIOR APPLICATION

60 mm System Interior Section Details - Doors

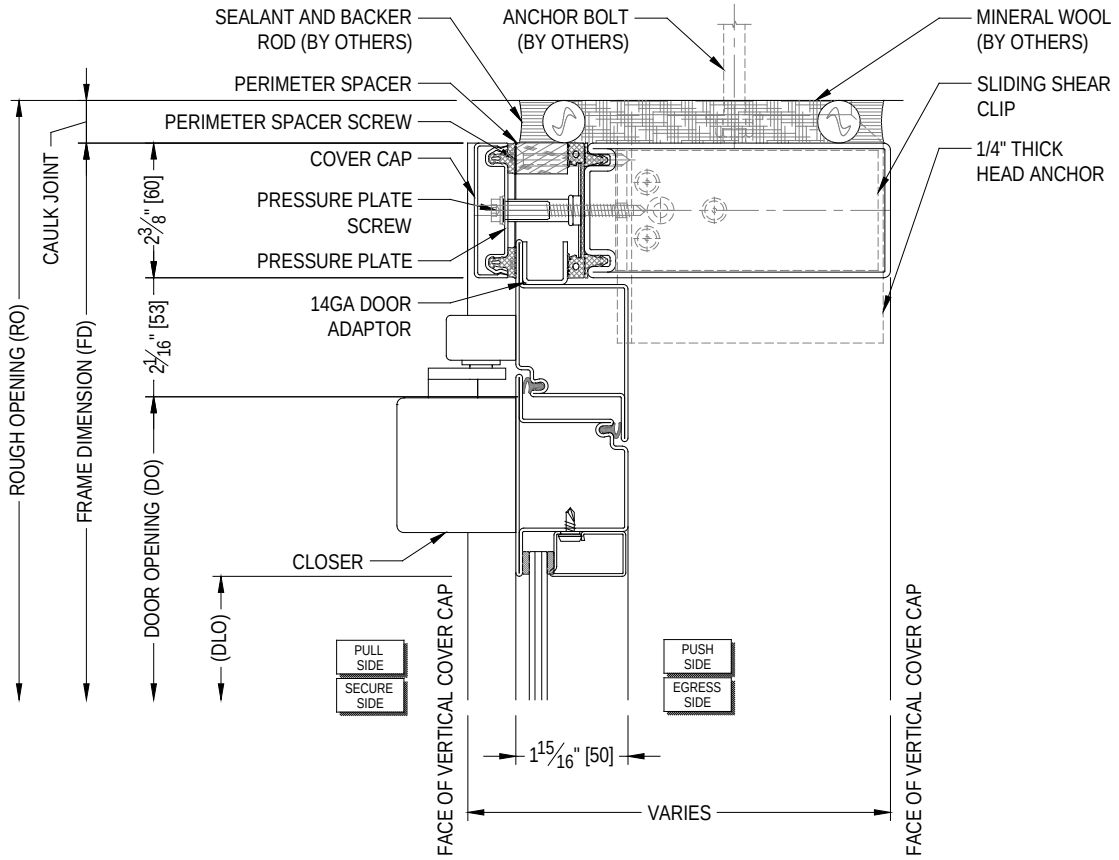

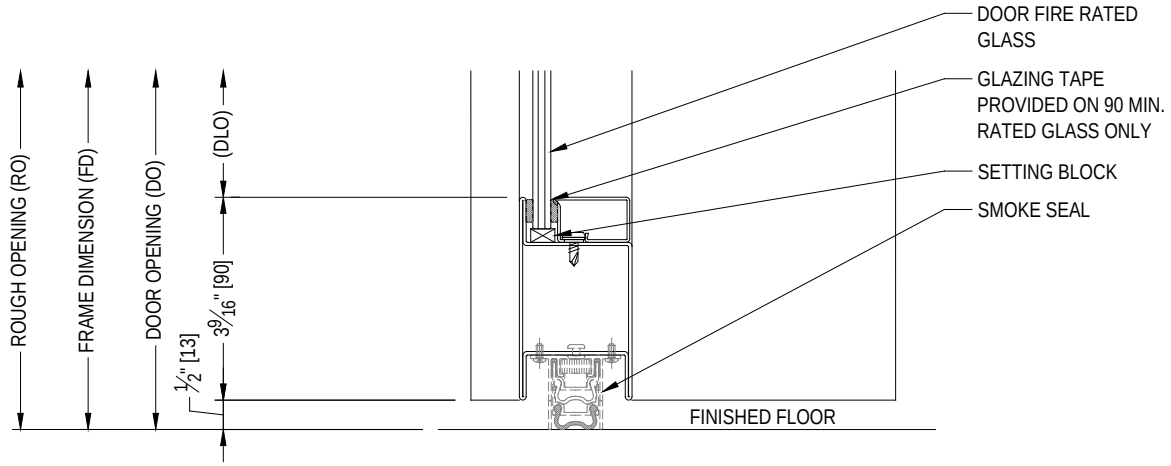

40 HORIZONTAL MULLION, DOOR HEADER, AND BOTTOM RAIL
INTERIOR APPLICATION

60 mm System Interior Section Details - Doors

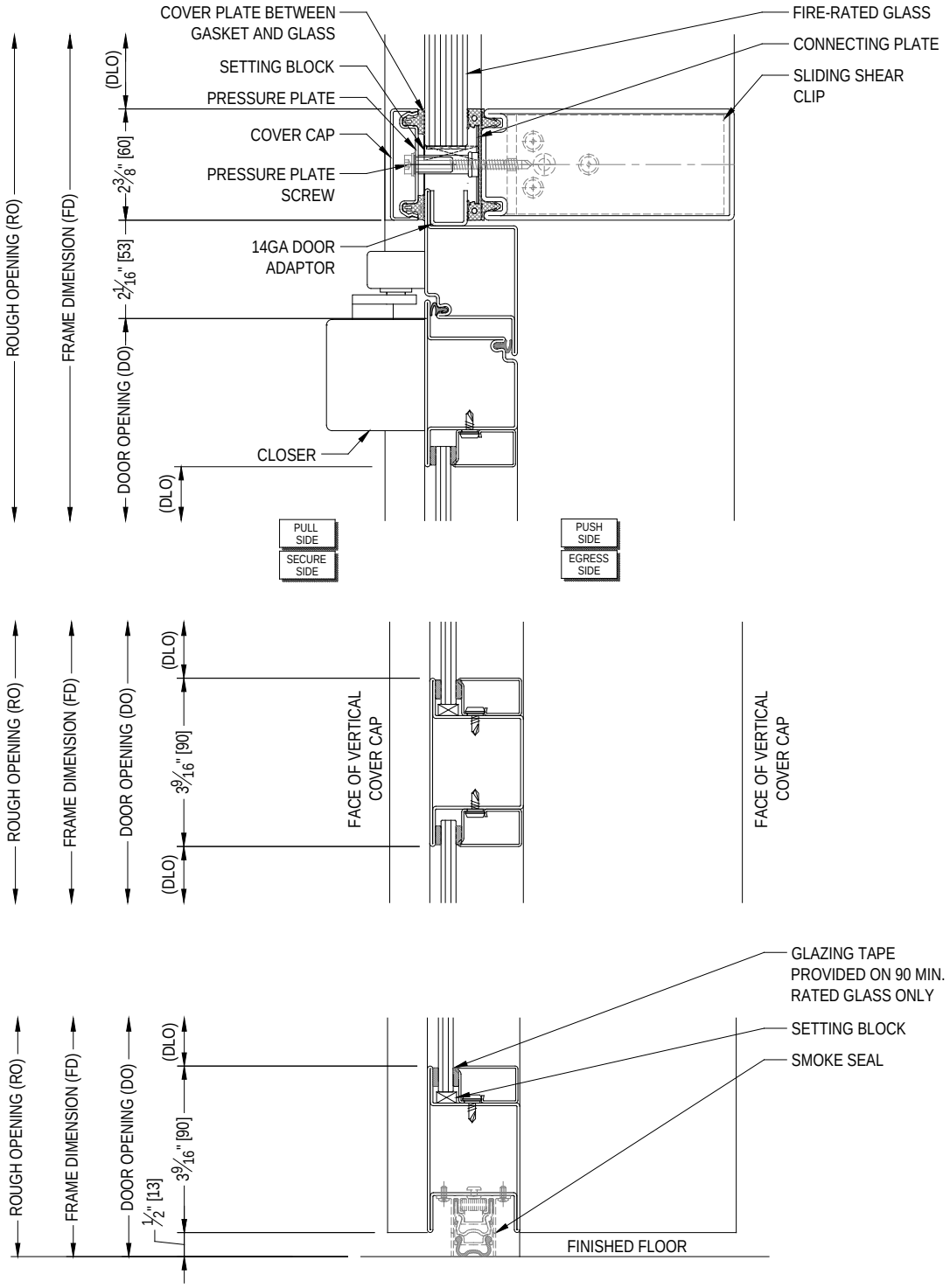

41 DOOR HEADER WITH TRANSOM, DOOR MID RAIL, AND BOTTOM RAIL
INTERIOR APPLICATION

60 mm System Interior Section Details - Doors

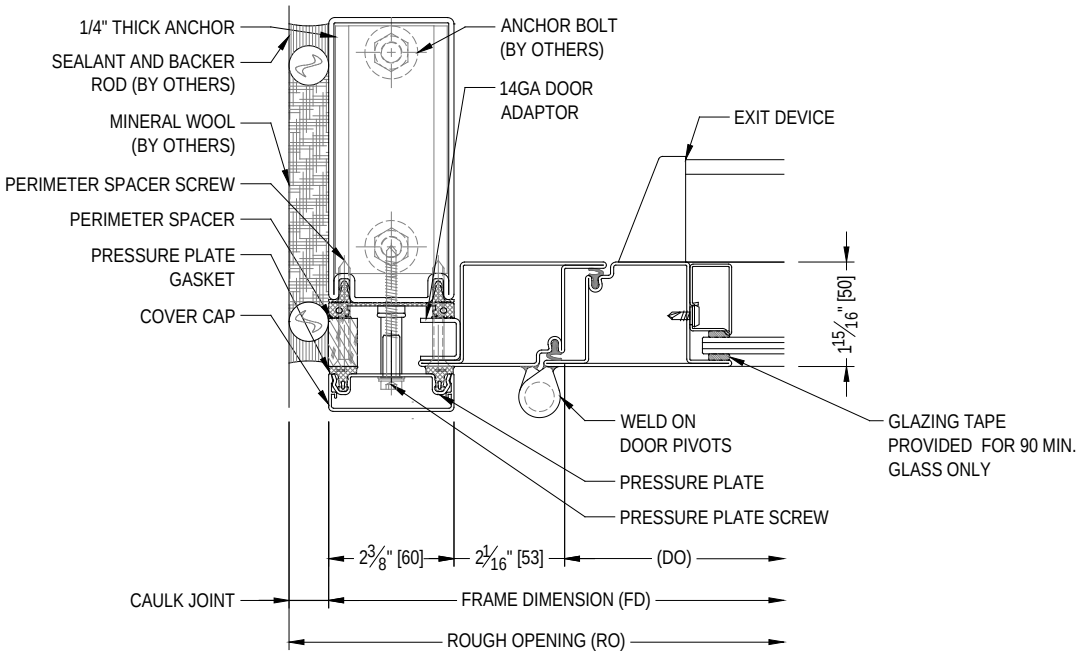

42 VERTICAL MULLION WITH DOOR JAMB AT PIVOT
INTERIOR APPLICATION

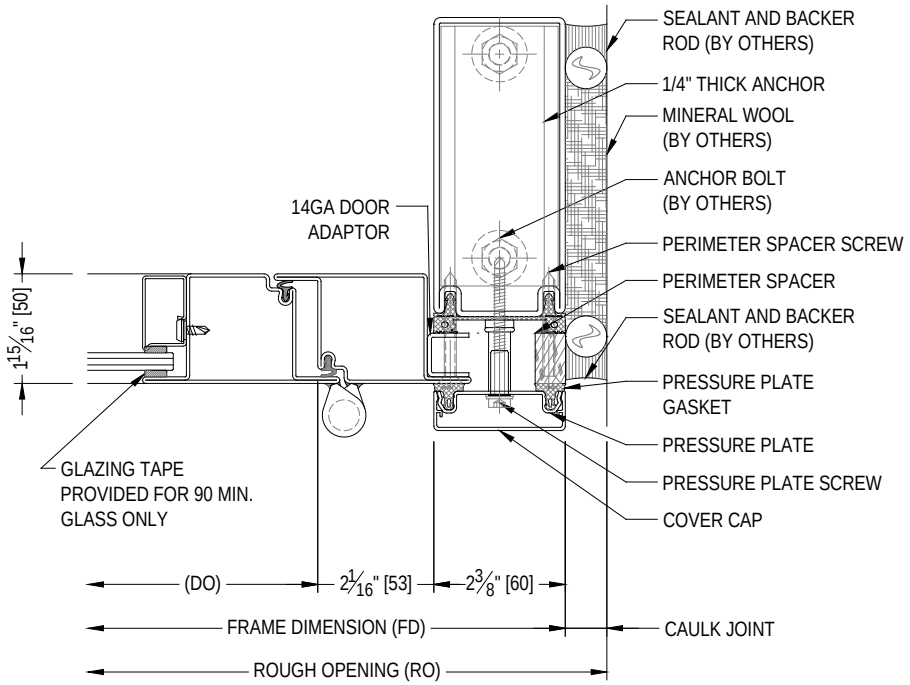

43 VERTICAL MULLION WITH DOOR JAMB AT PIVOT
INTERIOR APPLICATION

60 mm System Interior Section Details - Doors

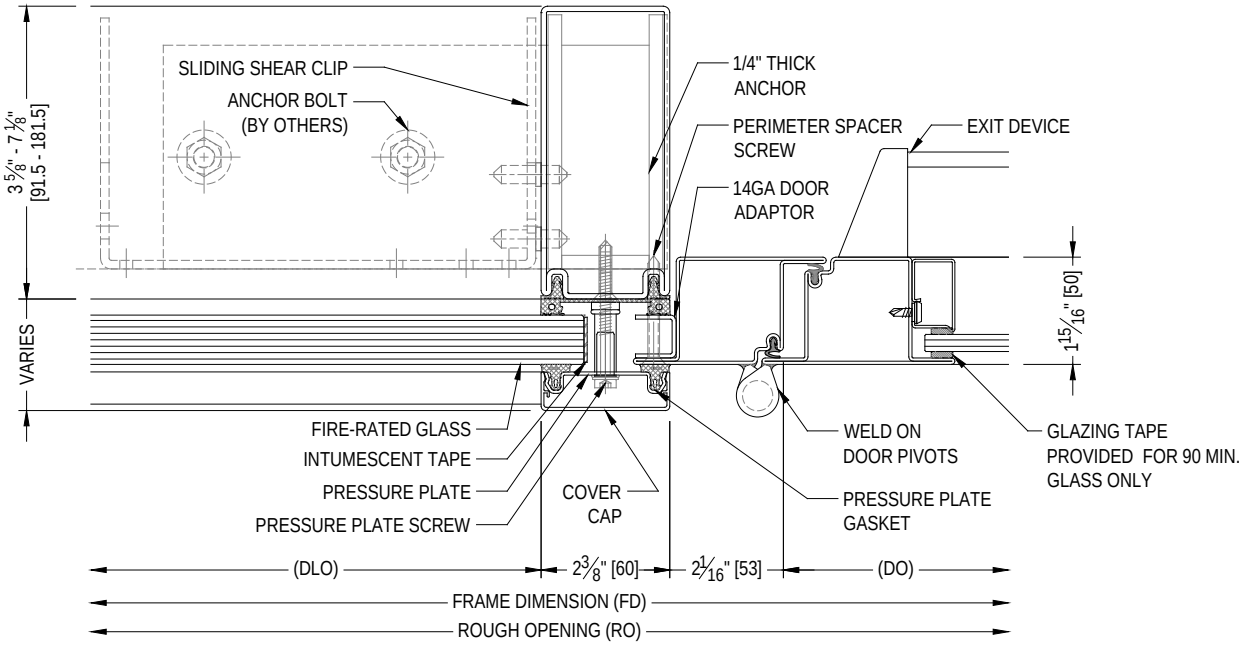

44 VERTICAL MULLION WITH SIDELITE DOOR JAMB AT PIVOT
INTERIOR APPLICATION

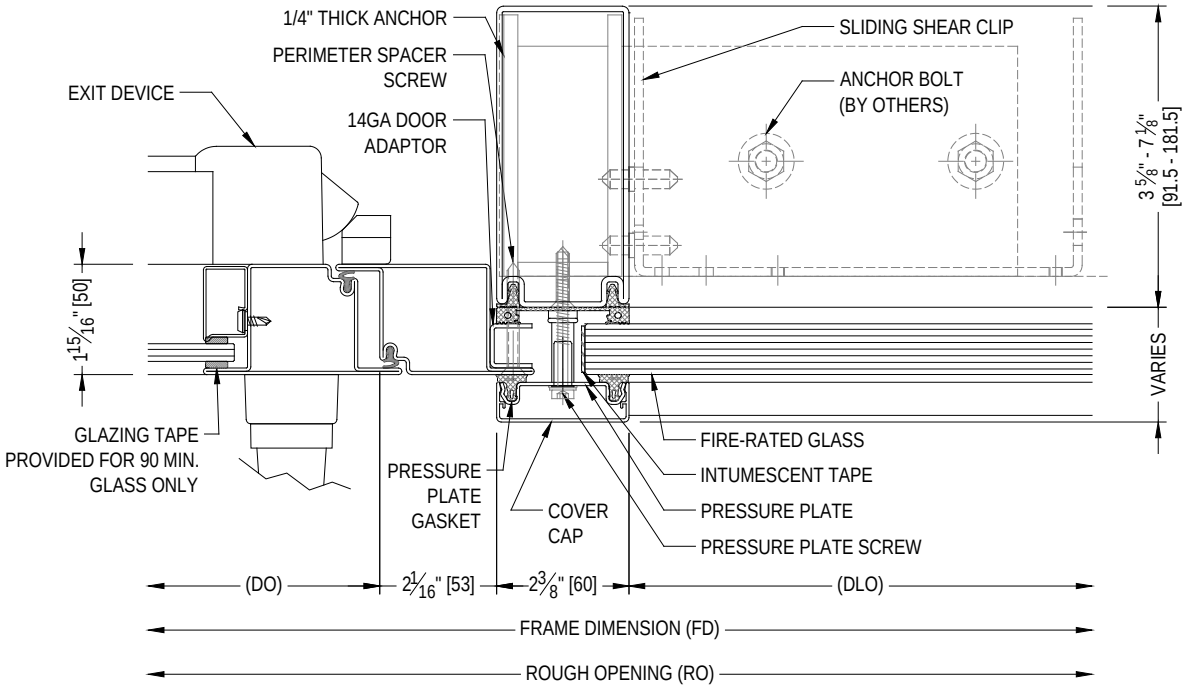

45 VERTICAL MULLION WITH SIDELITE DOOR JAMB AT LEVER
INTERIOR APPLICATION

60 mm System Exterior Section Details

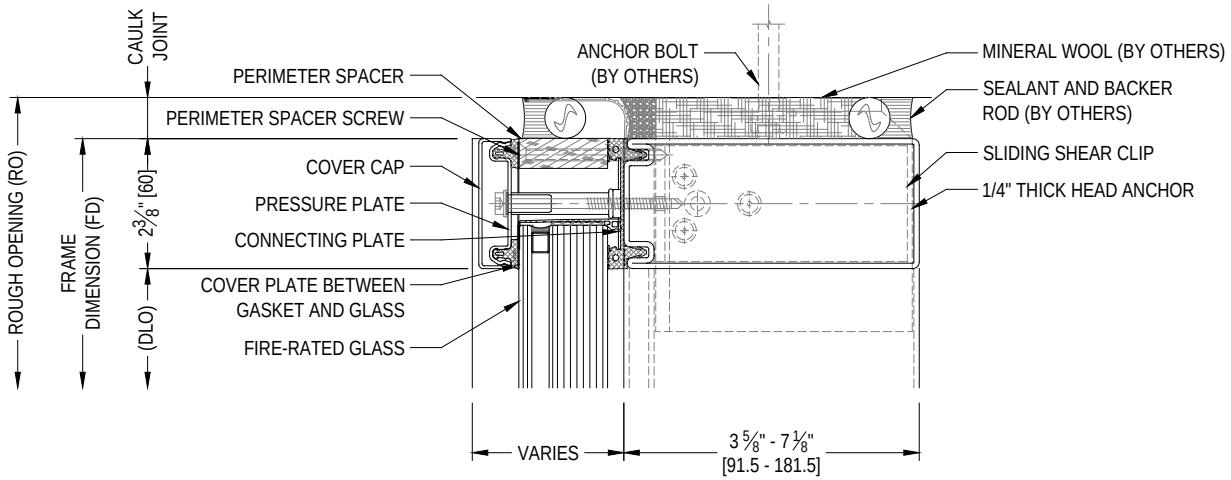

46 HEAD SECTION
EXTERIOR APPLICATION

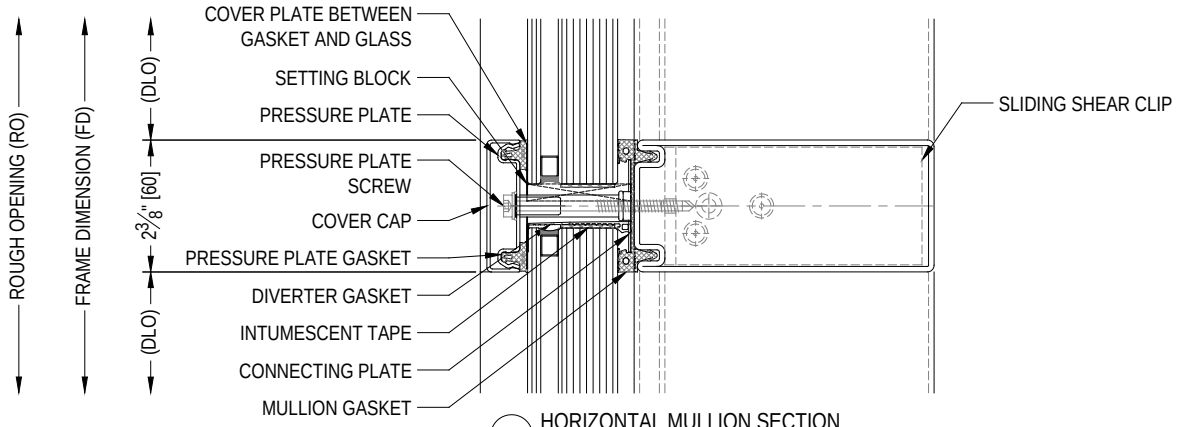

47 HORIZONTAL MULLION SECTION
EXTERIOR APPLICATION

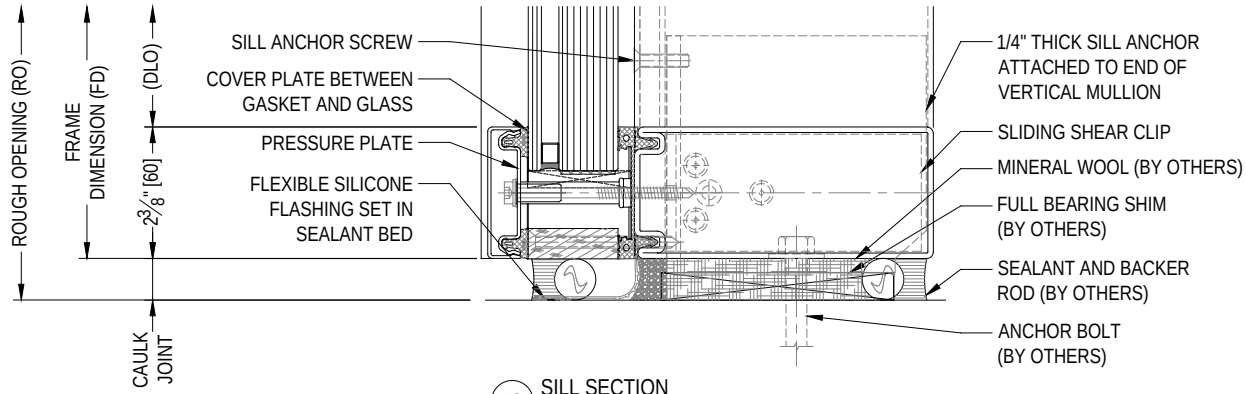

48 SILL SECTION
EXTERIOR APPLICATION

60 mm System Exterior Section Details

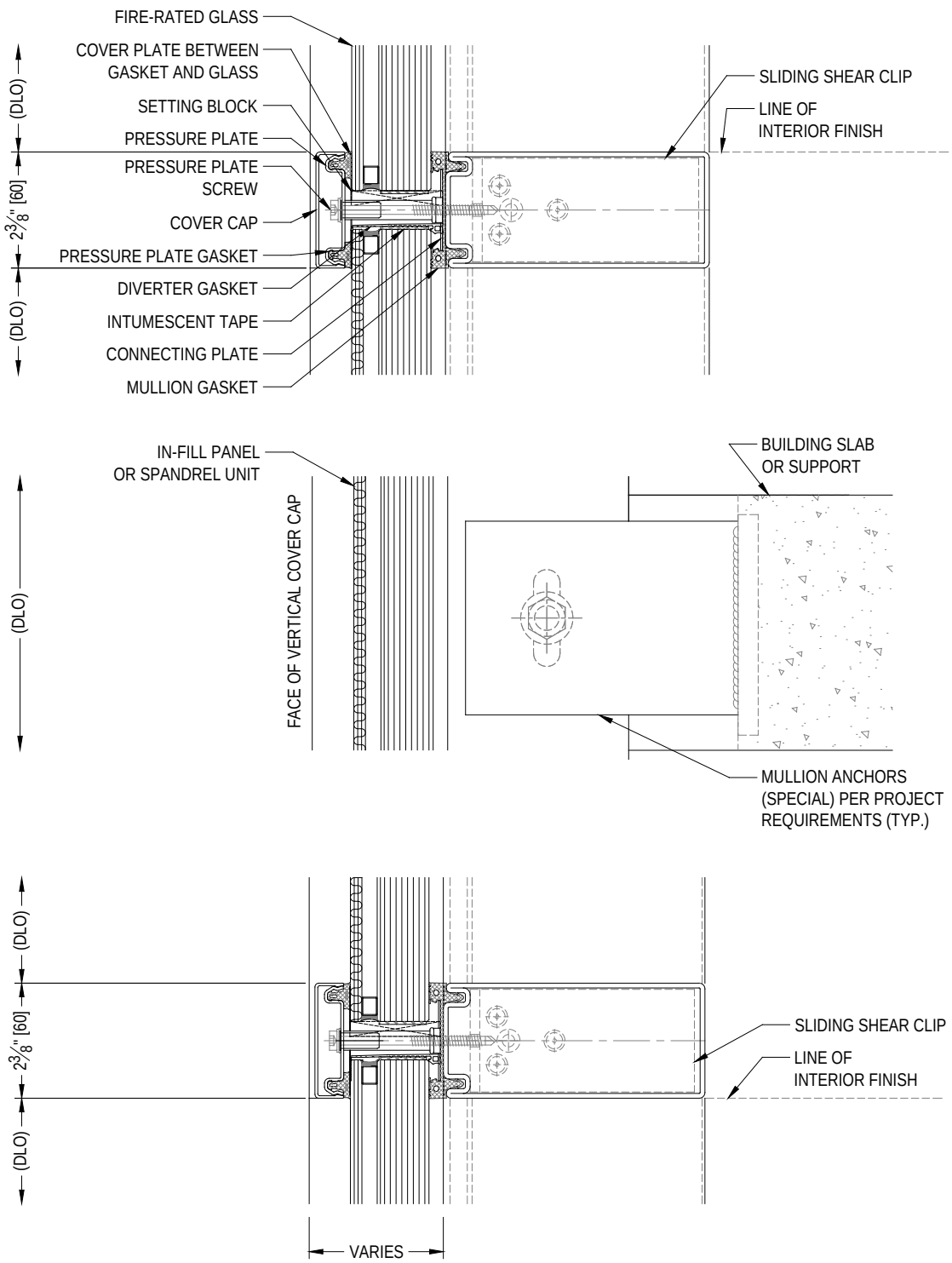

49 HORIZONTAL MULLION SECTION WITH MULLION ANCHOR AT SLAB EDGE
EXTERIOR APPLICATION

60 mm System Exterior Section Details

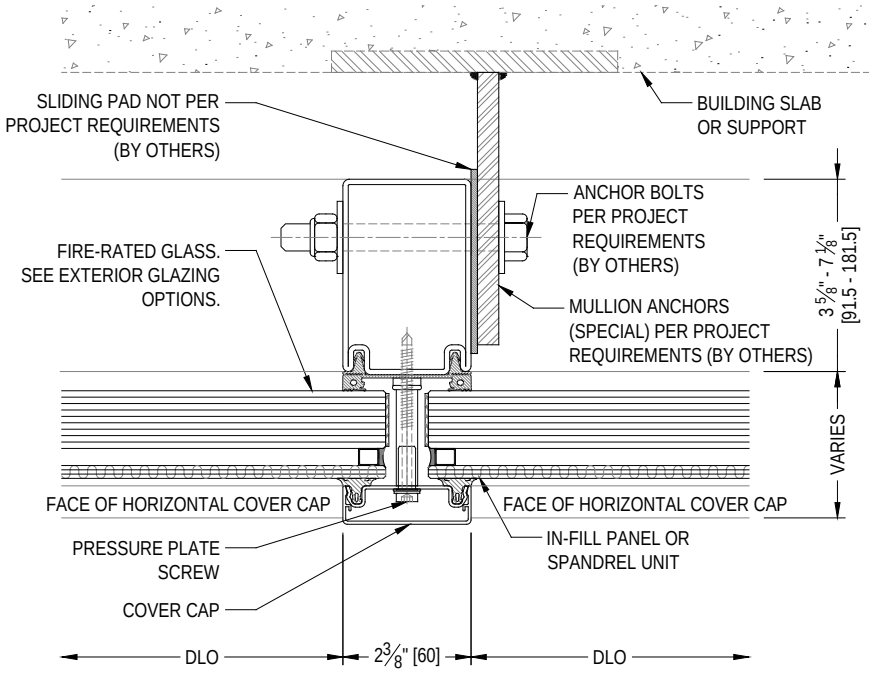

50 VERTICAL MULLION SECTION AT SLAB
EXTERIOR APPLICATION

60 mm System Exterior Section Details

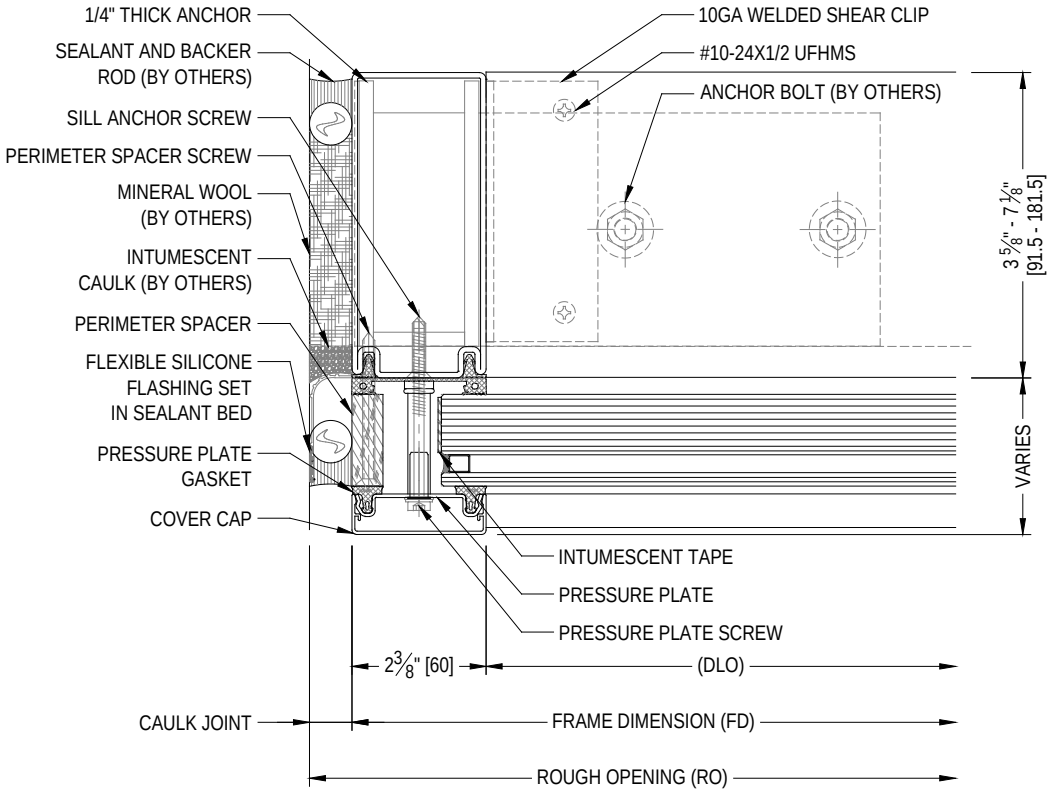

51 JAMB SECTION WITH WELDED SHEAR CLIP AT SILL
EXTERIOR APPLICATION

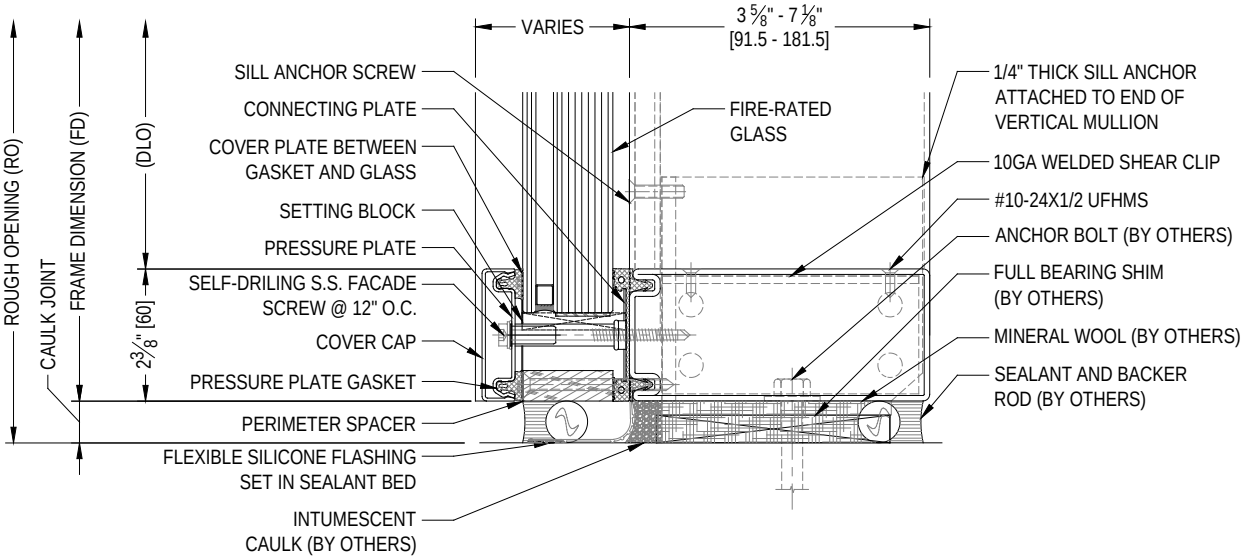

52 SILL SECTION WITH WELDED SHEAR CLIP
EXTERIOR APPLICATION

60 mm System Exterior Section Details

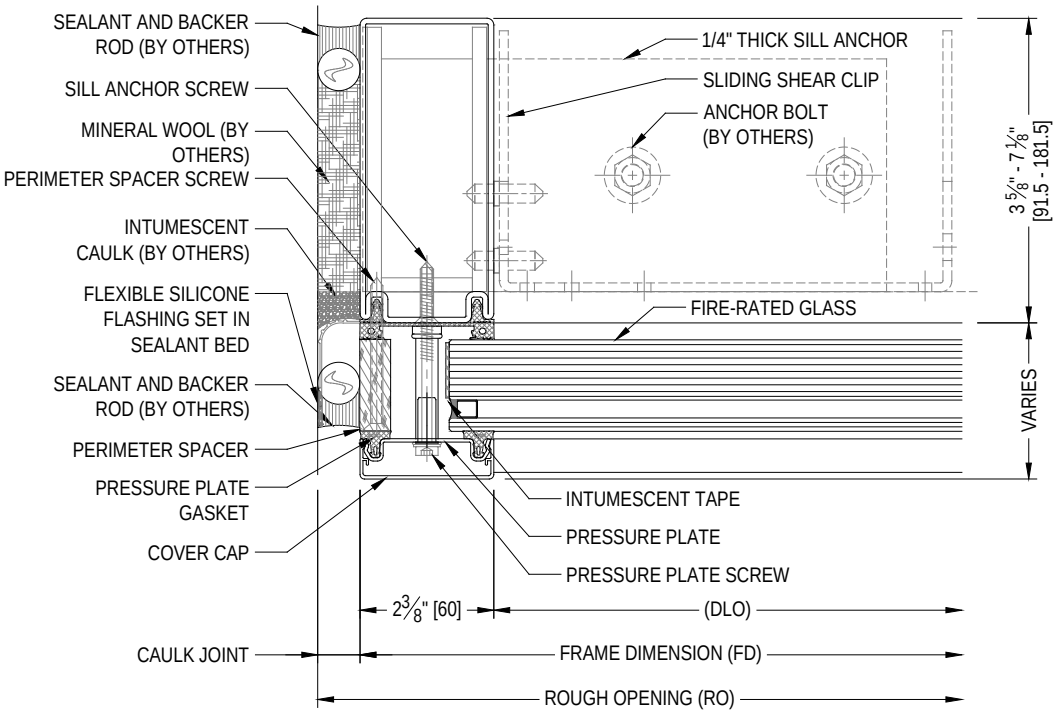

53 JAMB SECTION WITH SLIDING SHEAR CLIP AT SILL
EXTERIOR APPLICATION

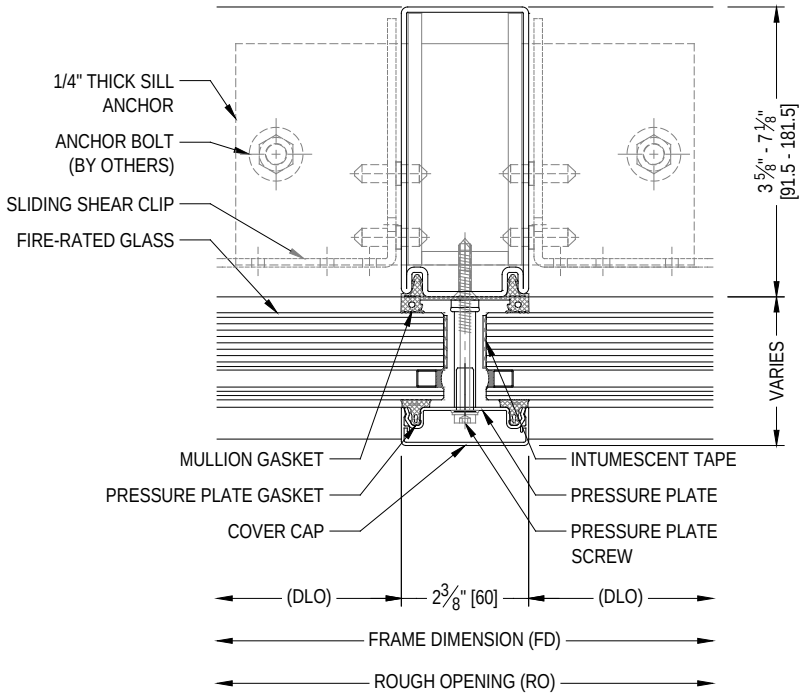

54 VERTICAL MULLION
EXTERIOR APPLICATION

60 mm System Exterior Section Details - Doors

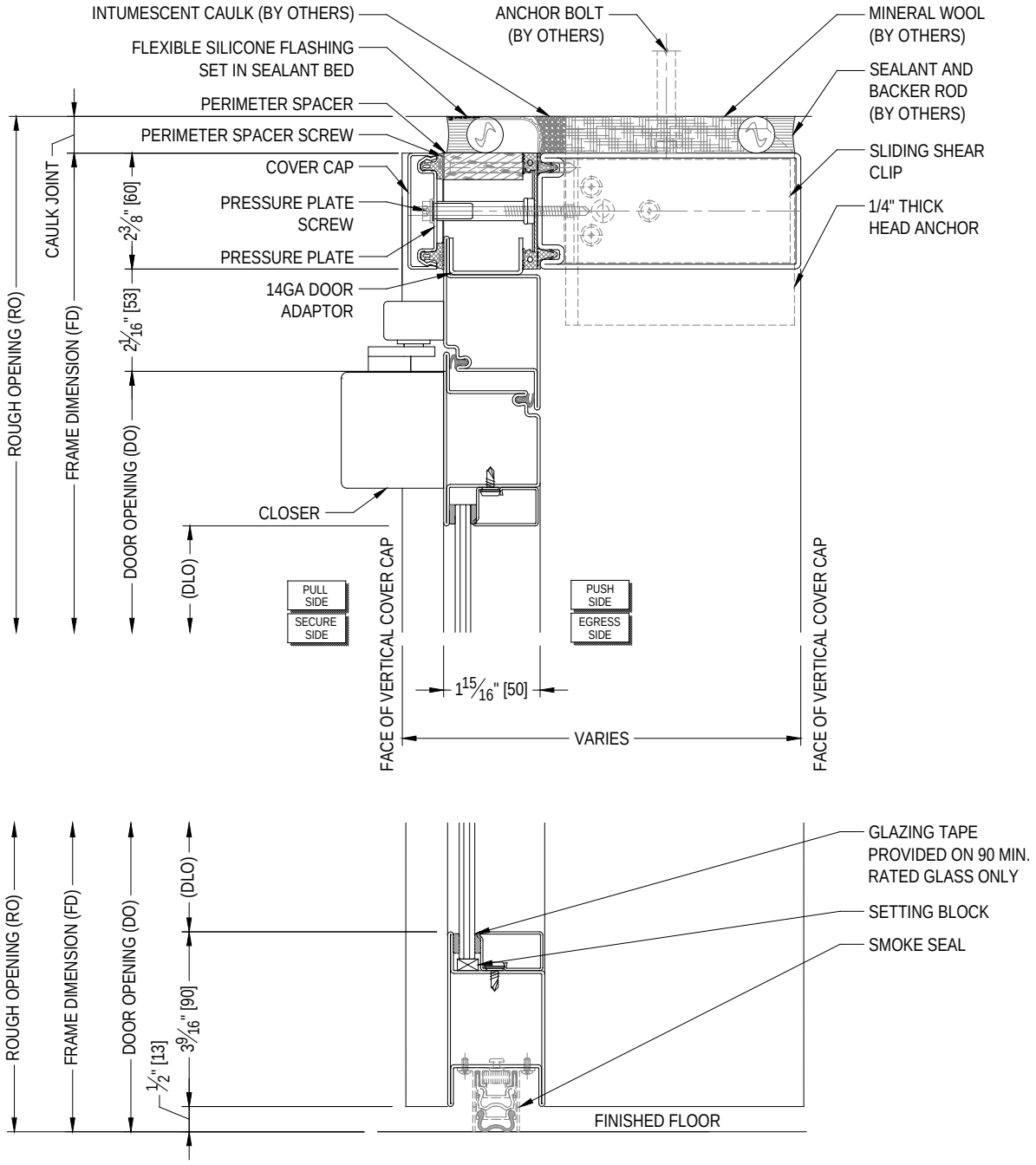

55 HORIZONTAL MULLION, DOOR HEADER, AND BOTTOM RAIL
EXTERIOR APPLICATION

60 mm System Exterior Section Details - Doors

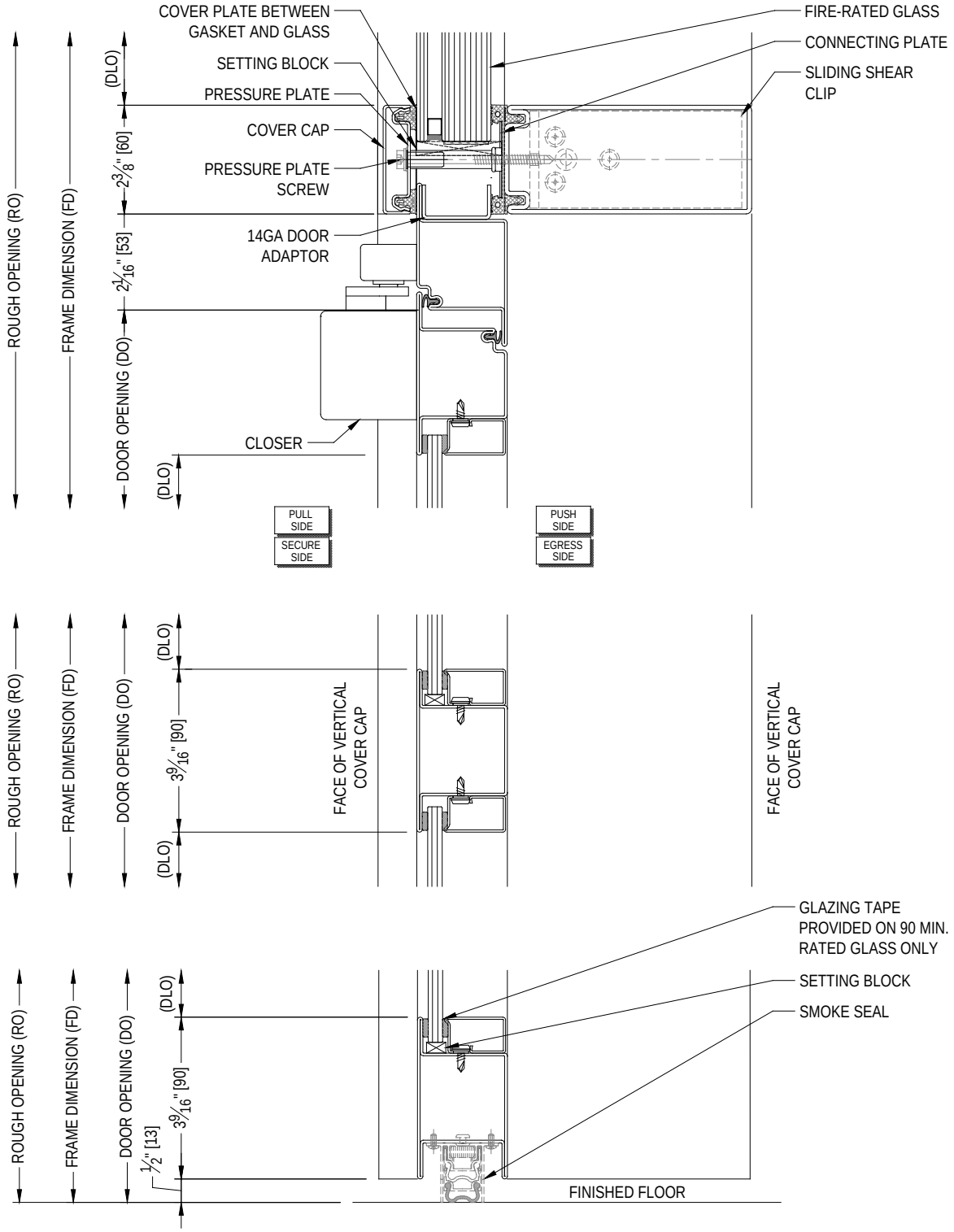

56 DOOR HEADER WITH TRANSOM, DOOR MID RAIL, AND BOTTOM RAIL
EXTERIOR APPLICATION

60 mm System Exterior Section Details - Doors

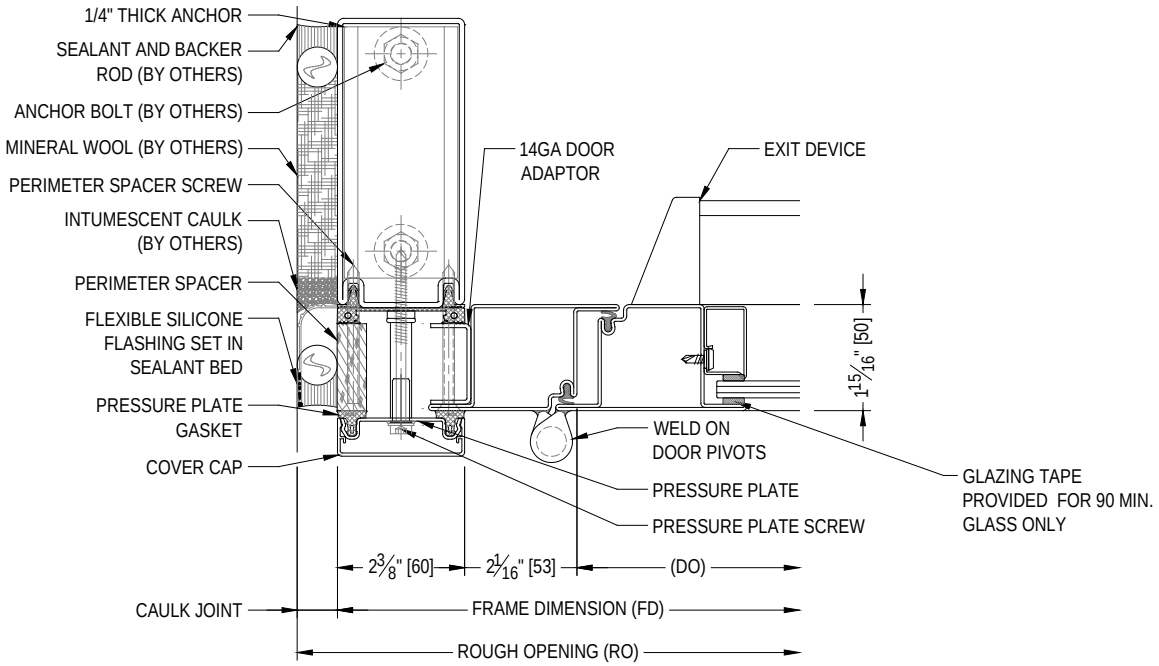

57 VERTICAL MULLION WITH DOOR JAMB AT PIVOT
EXTERIOR APPLICATION

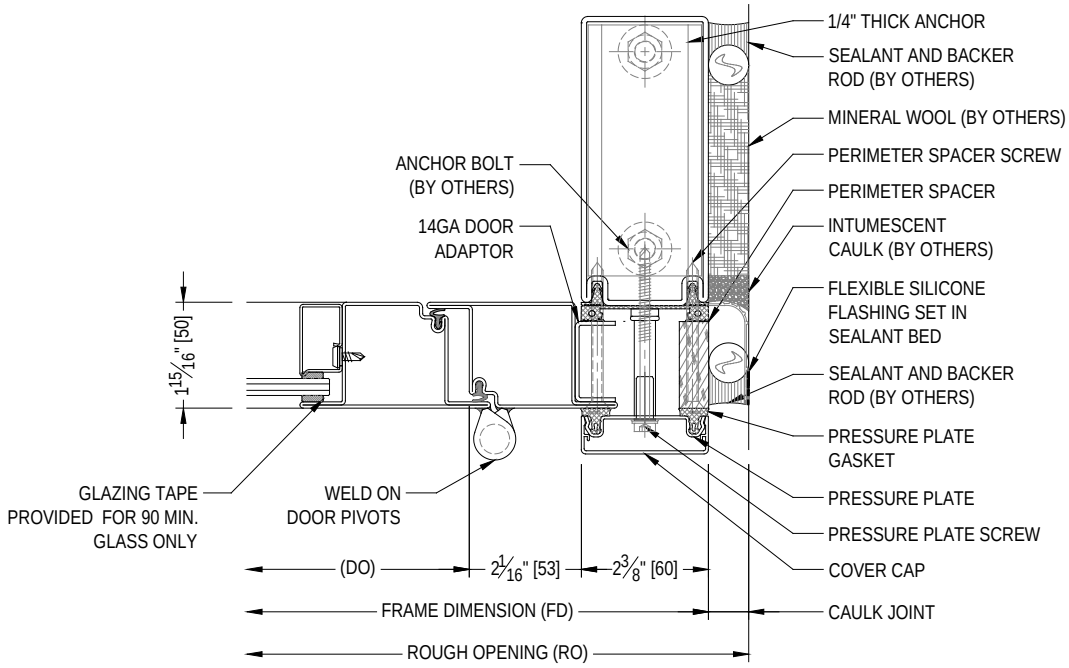

58 VERTICAL MULLION WITH DOOR JAMB AT PIVOT
EXTERIOR APPLICATION

60 mm System Exterior Section Details – Doors

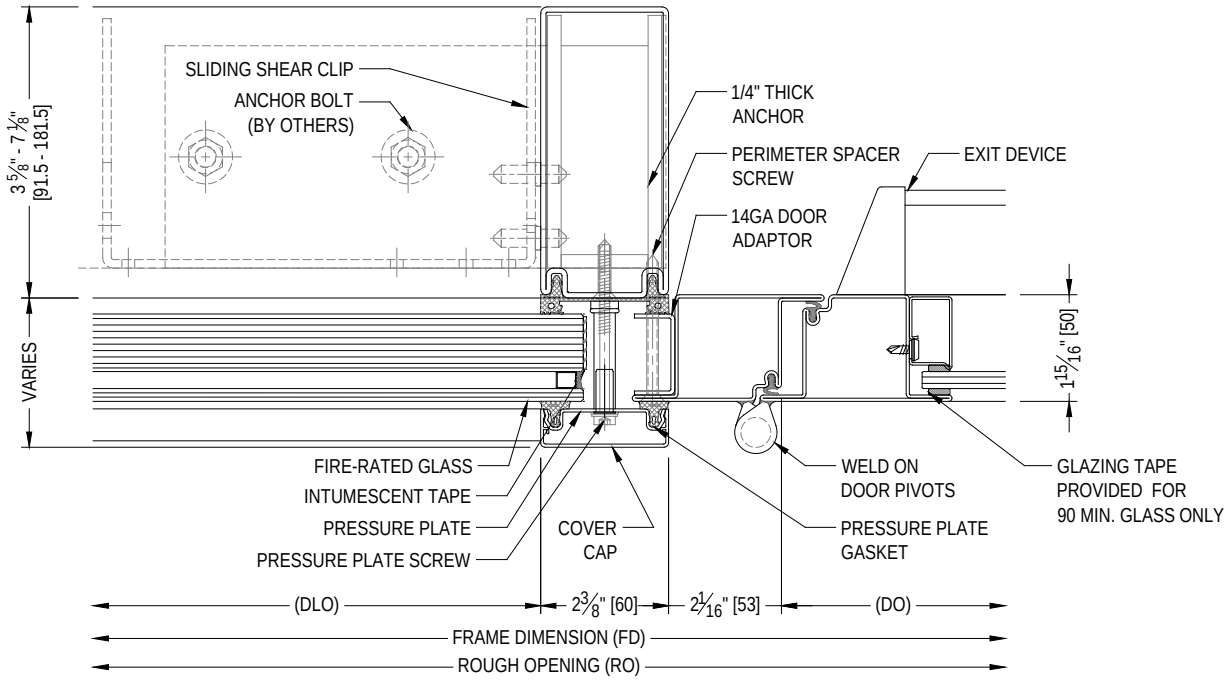

59 VERTICAL MULLION WITH SIDELITE DOOR JAMB AT PIVOT
EXTERIOR APPLICATION

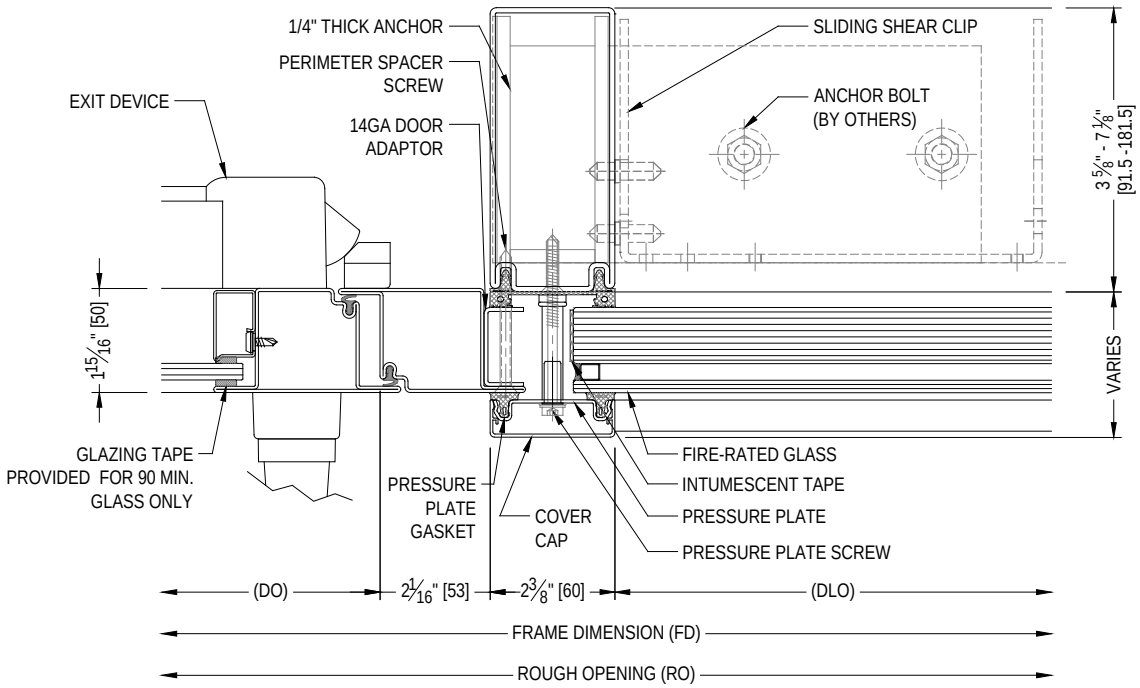

60 VERTICAL MULLION WITH SIDELITE DOOR JAMB AT LEVER
EXTERIOR APPLICATION

60 mm System Exterior Section Details

Hurricane Application – Concrete Surrounding Condition

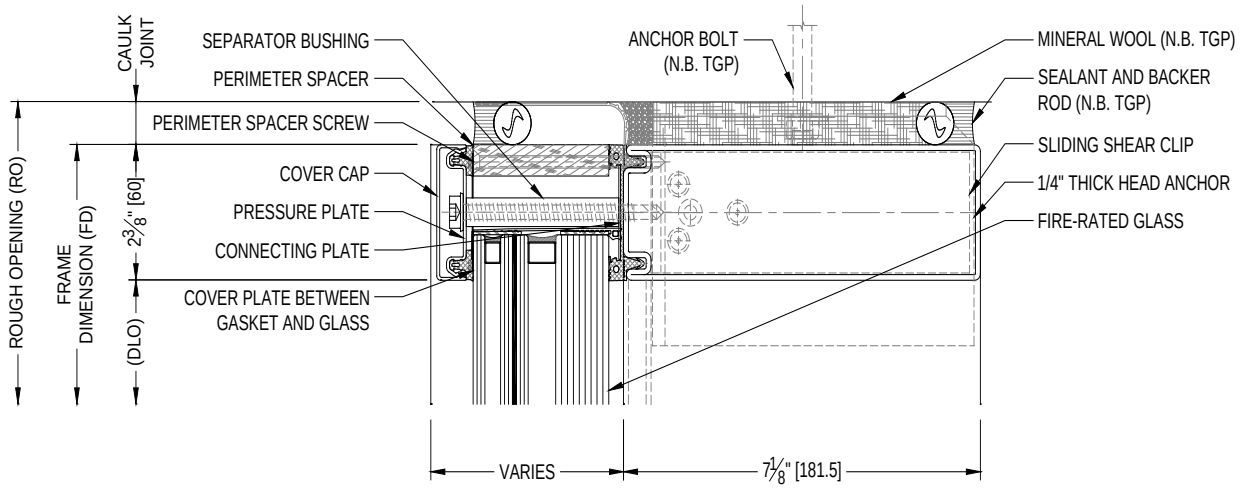

61 HEAD SECTION
CURTAINWALL HURRICANE

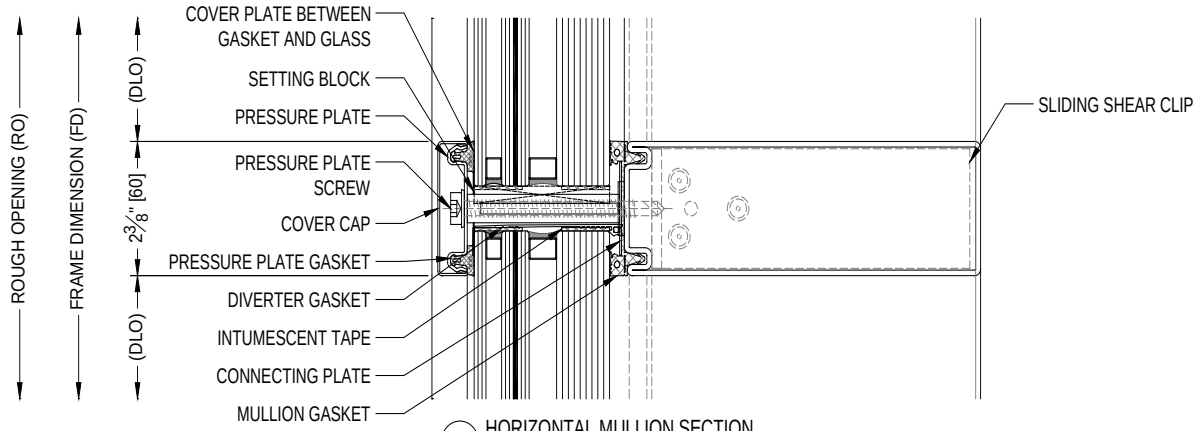

62 HORIZONTAL MULLION SECTION
CURTAINWALL HURRICANE

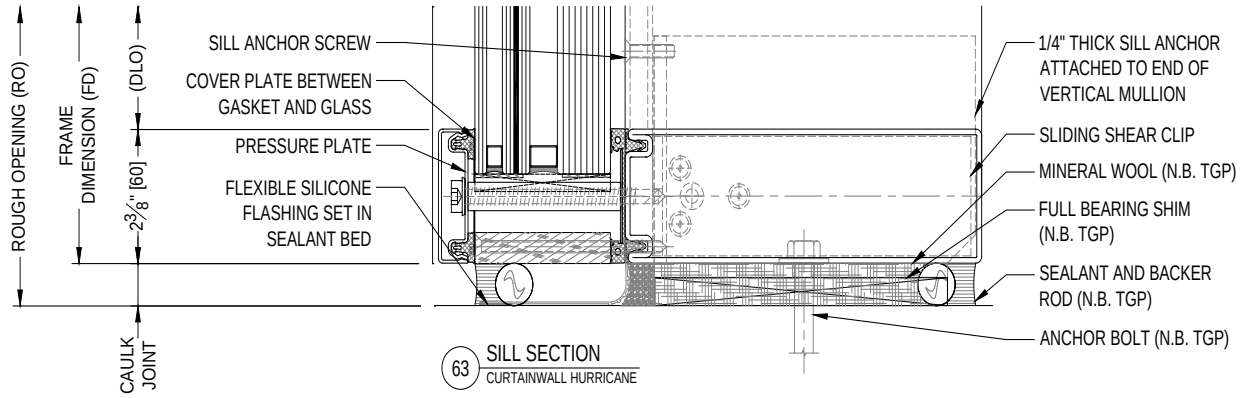

63 SILL SECTION
CURTAINWALL HURRICANE

60 mm System Exterior Section Details

Hurricane Application – Concrete Surrounding Condition

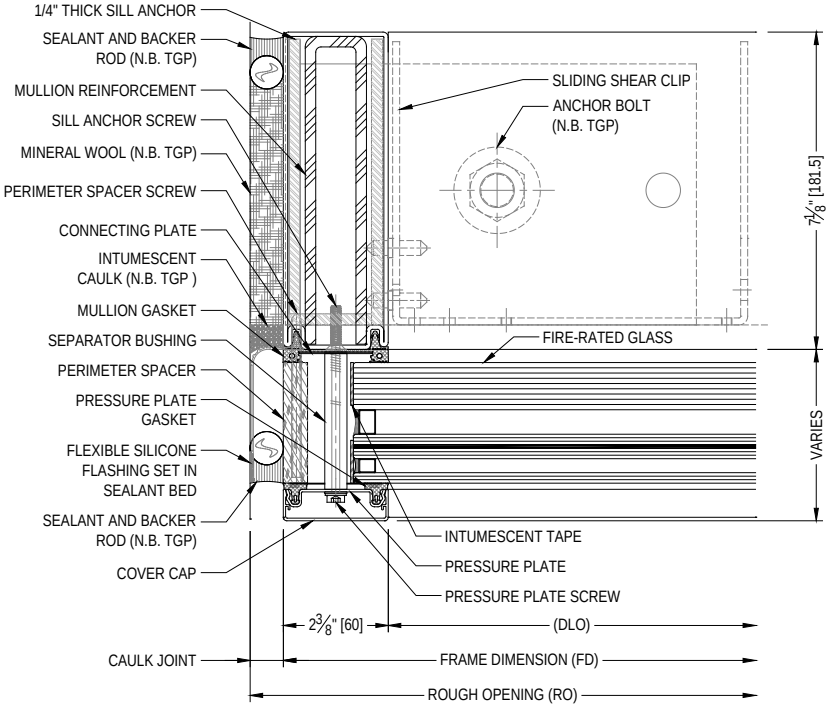

64 JAMB SECTION WITH SLIDING SHEAR CLIP AT SILL
CURTAINWALL HURRICANE

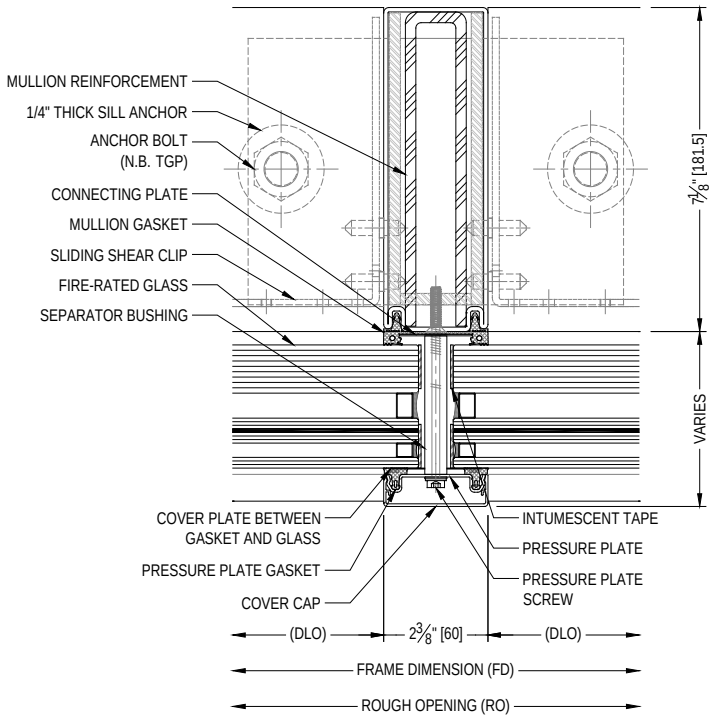

65 VERTICAL MULLION
CURTAINWALL HURRICANE

60 mm System Exterior Section Details

Hurricane Application – Steel Surrounding Condition

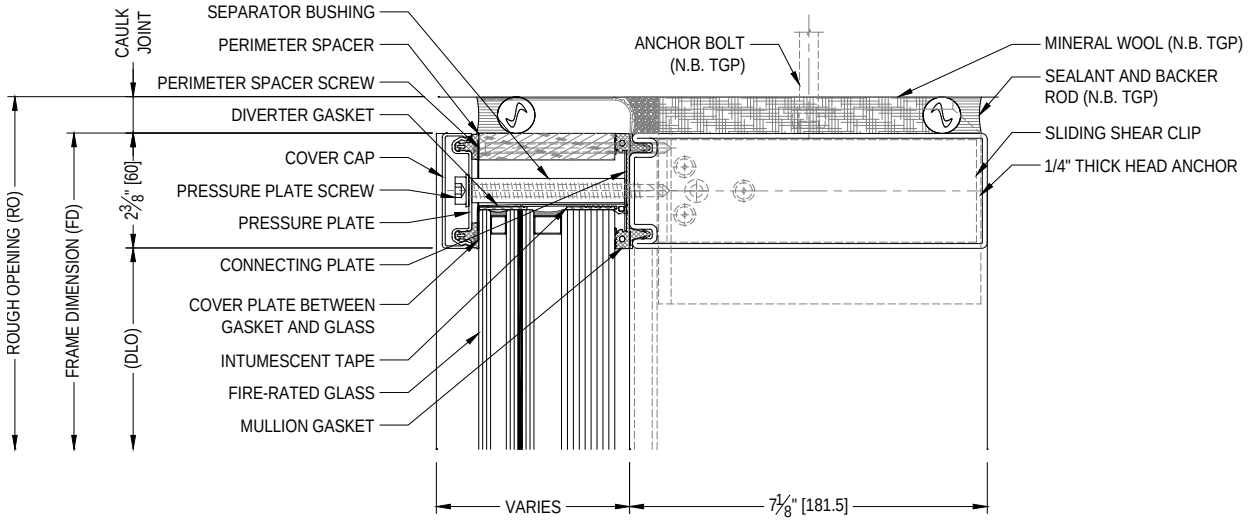

66 HEAD SECTION
CURTAINWALL HURRICANE

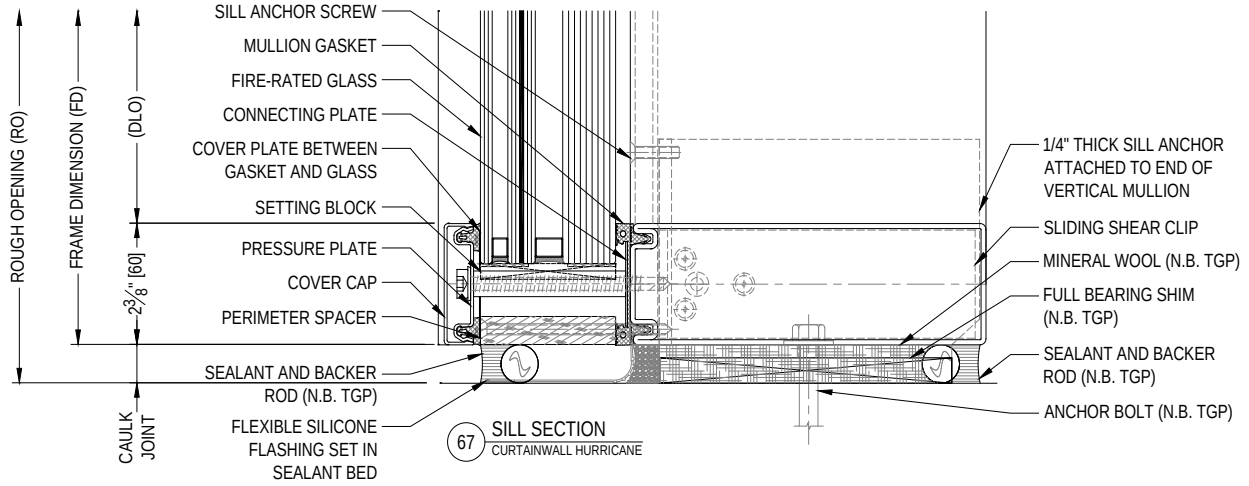

67 SILL SECTION
CURTAINWALL HURRICANE

60 mm System Exterior Section Details

Hurricane Application – Steel Surrounding Condition

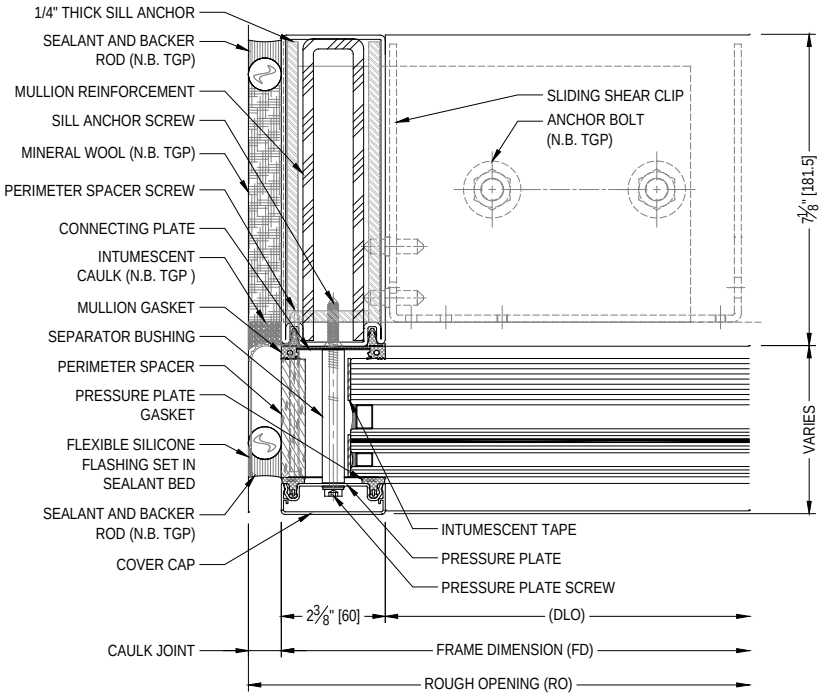

68 JAMB SECTION WITH SLIDING SHEAR CLIP AT SILL
CURTAINWALL HURRICANE

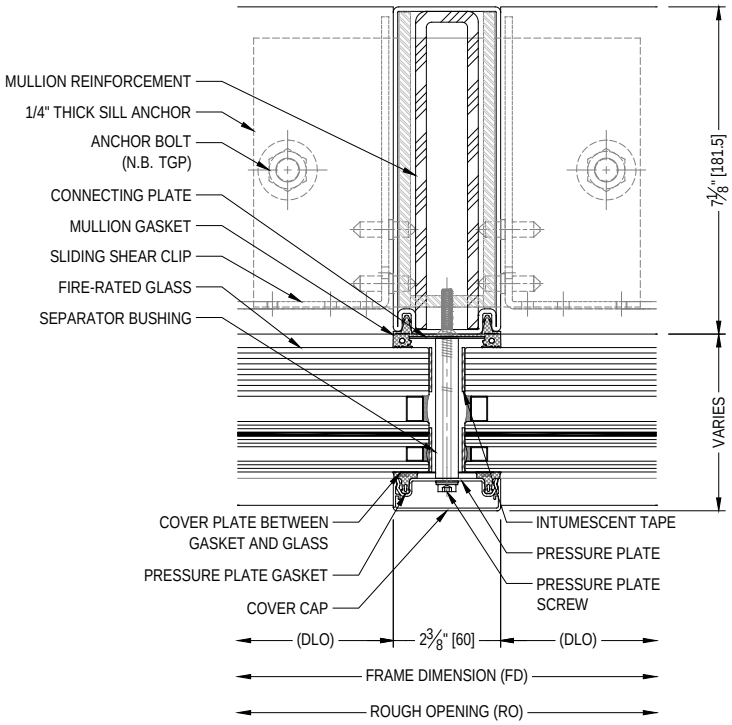

69 VERTICAL MULLION
CURTAINWALL HURRICANE

60 mm System Exterior Section Details

Hurricane Application – Timber Surrounding Condition

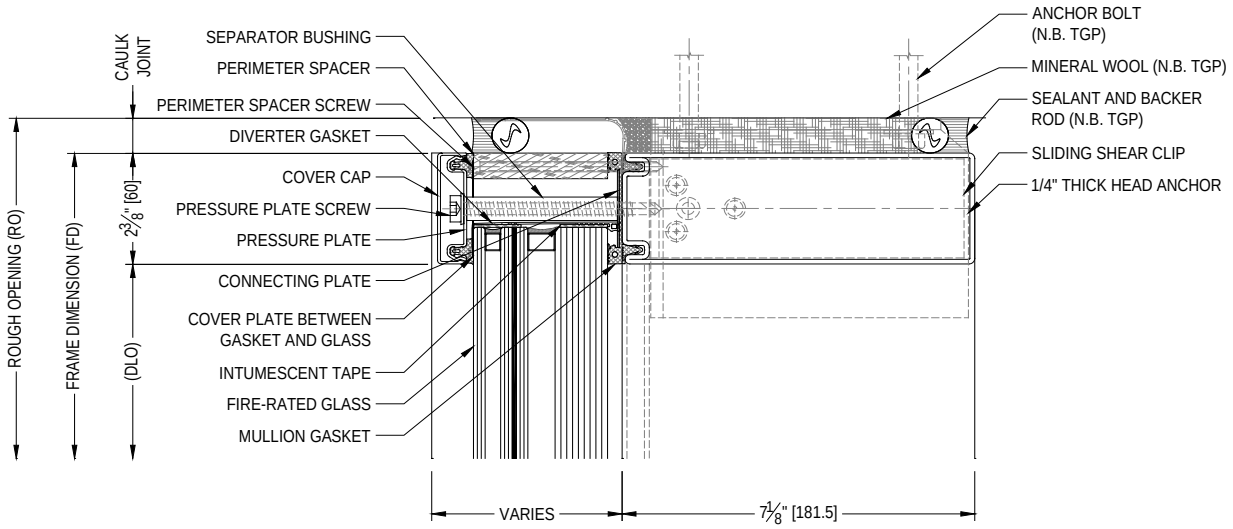

70 HEAD SECTION
CURTAINWALL HURRICANE

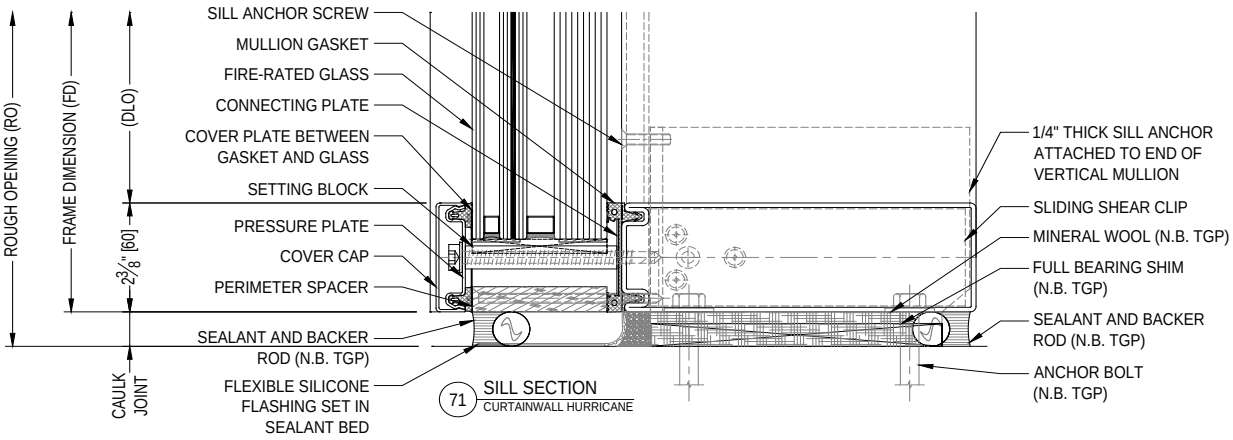

71 SILL SECTION
CURTAINWALL HURRICANE

60 mm System Exterior Section Details

Hurricane Application – Timber Surrounding Condition

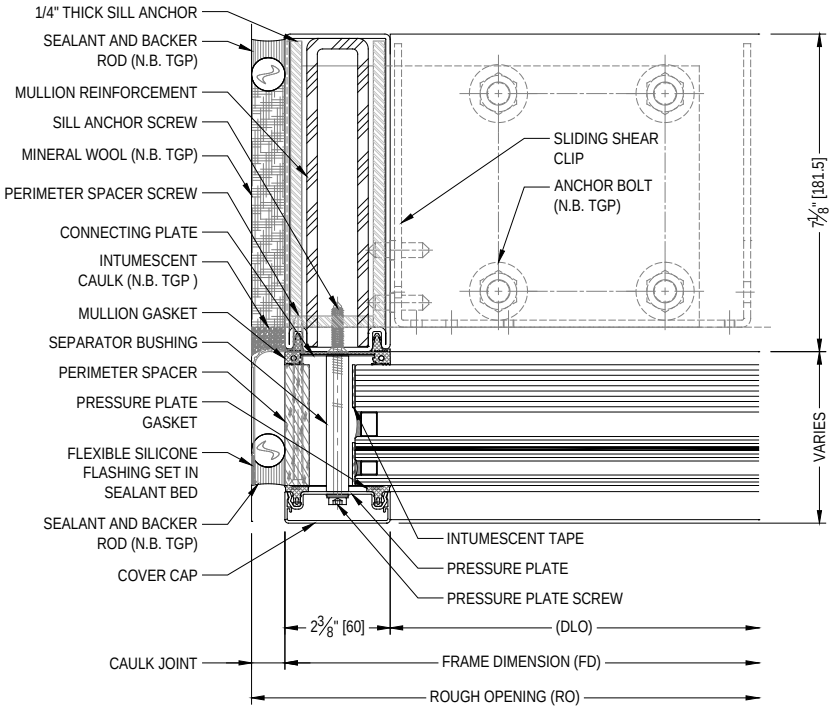

72 JAMB SECTION WITH SLIDING SHEAR CLIP AT SILL
CURTAINWALL HURRICANE

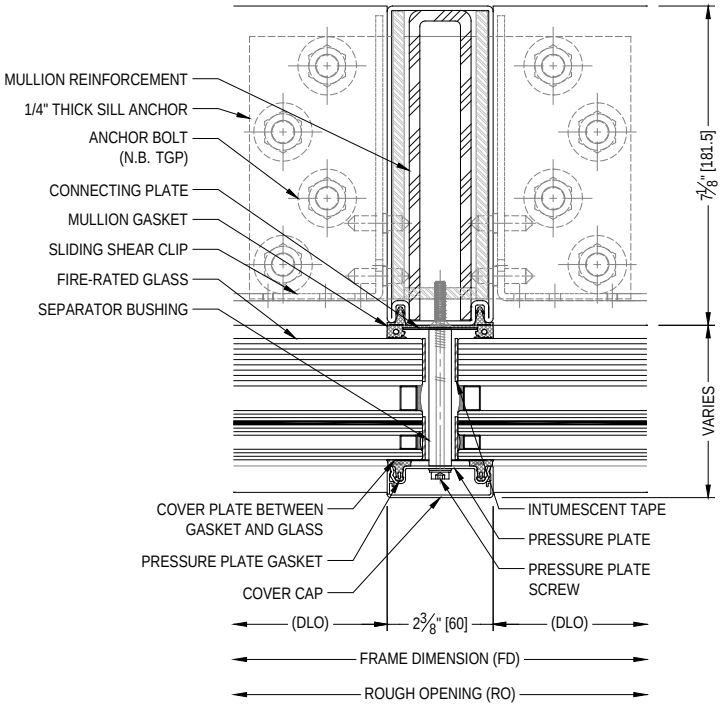

73 VERTICAL MULLION
CURTAINWALL HURRICANE

Section Details - Doors

Fireframes Designer Series or Fireframes Heat Barrier Series doors, or appropriately rated door by others in a Fireframes Designer Series door frame may be used within the Fireframes Curtainwall Series frames. Doors must be installed before glazing.

NOTE: Refer to product specific Installation Manual for the door(s) supplied with your order.

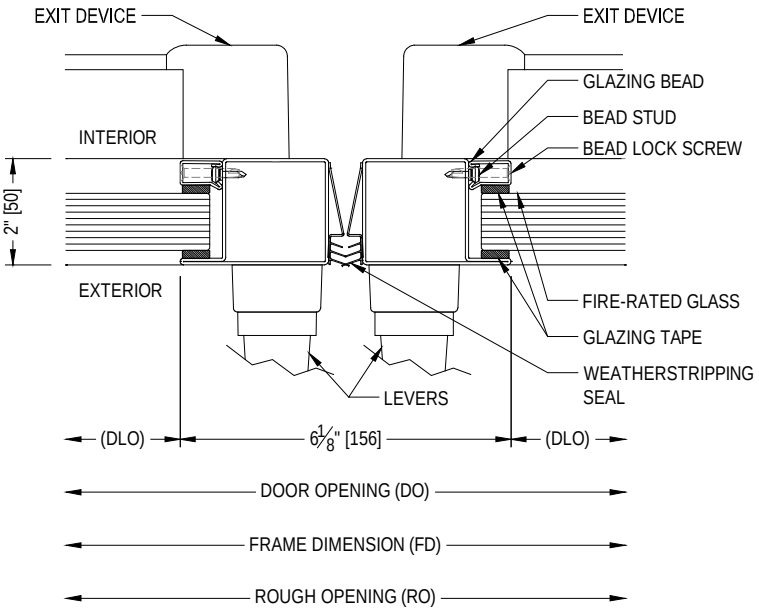

74 ACTIVE / ACTIVE MEETING STILE (STAINLESS STEEL PROFILES)
DESIGNER SERIES FRAME

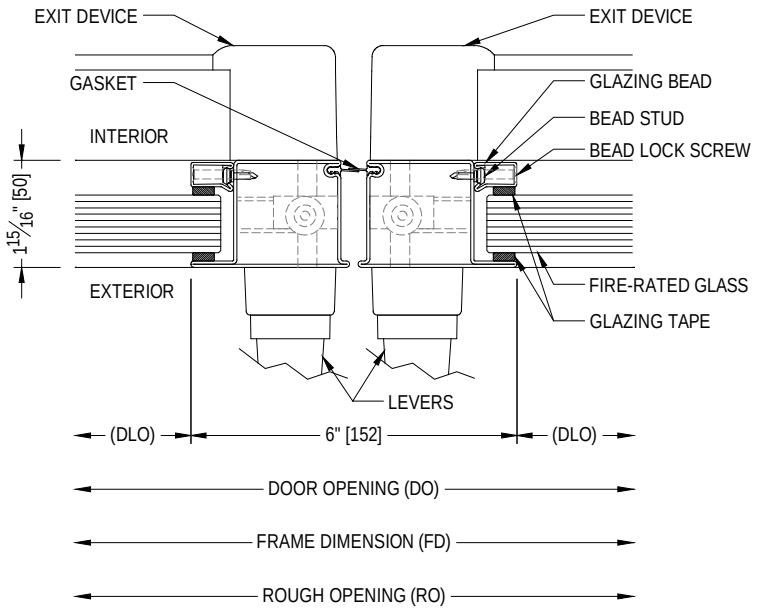

75 ACTIVE / ACTIVE MEETING STILE (STEEL PROFILES)
DESIGNER SERIES FRAME

Section Details – Doors

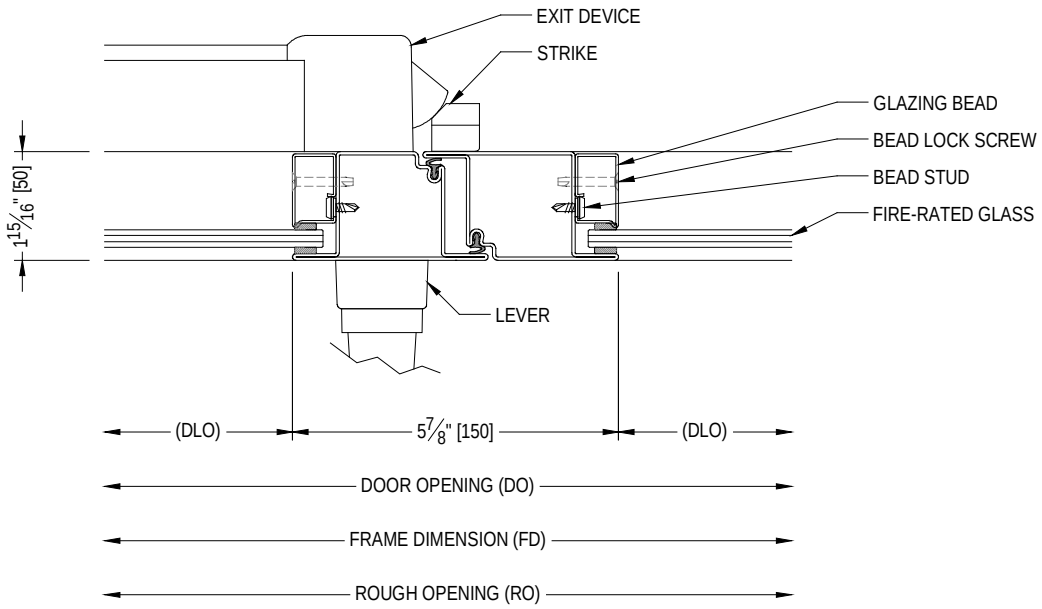

76 ACTIVE / FIXED MEETING STILE
DESIGNER SERIES FRAME

Corner Details

CORNER MULLION (INTERIOR APPLICATIONS ONLY)

- Corner mullions MUST be installed before the glazing material.
- Corners may be inside or outside corners ranging from 10° to 135°.
- Corner mullion should be set and installed next to first vertical mullion before setting second vertical mullion.

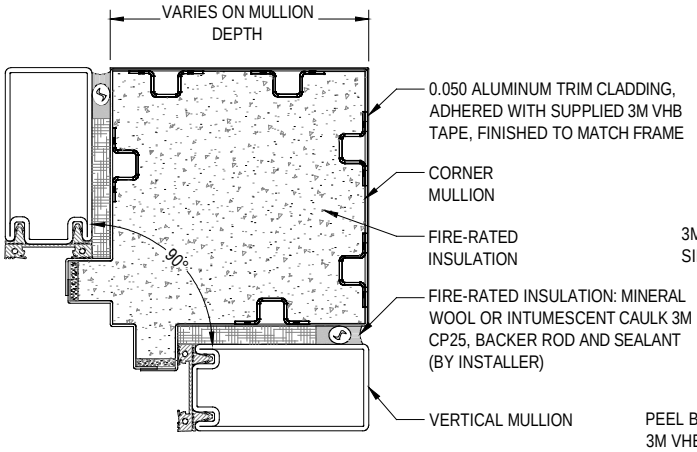

77 90 DEGREE INSIDE CORNER
INTERIOR APPLICATION

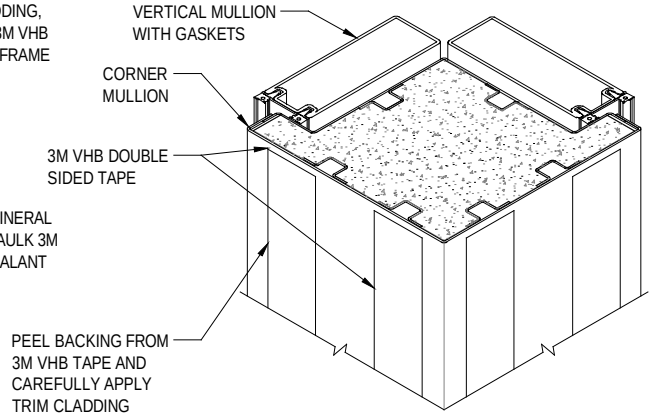

79 CORNER CLADDING INSTALLATION ISOMETRIC VIEW
INTERIOR APPLICATION

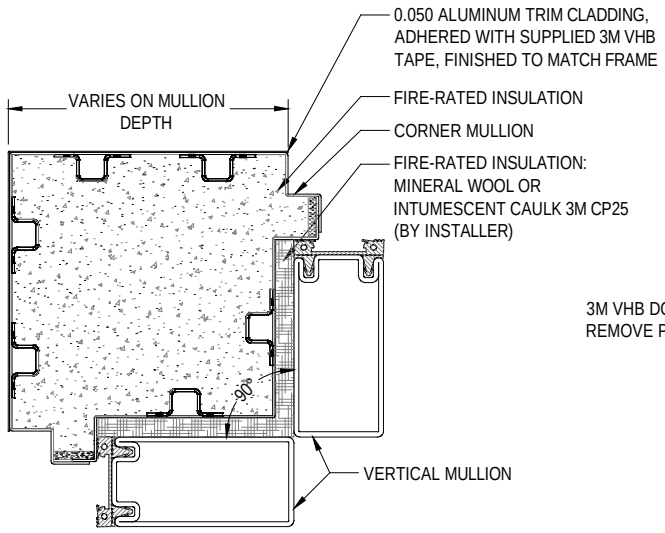

78 90 DEGREE OUTSIDE CORNER
INTERIOR APPLICATION

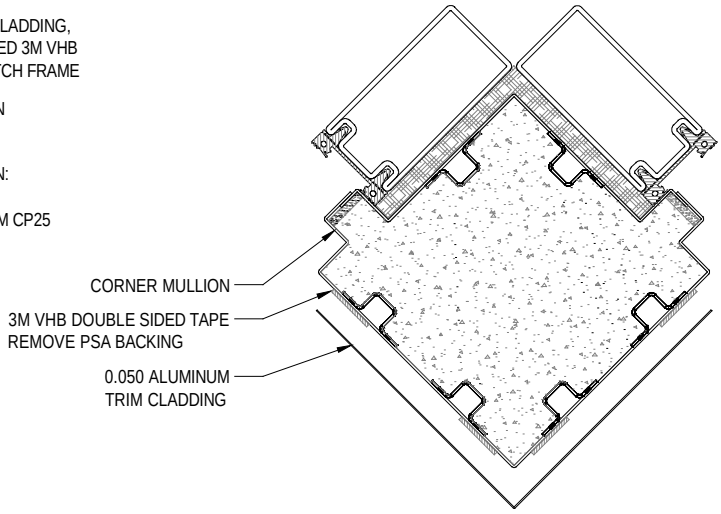

80 CORNER CLADDING INSTALLATION TOP VIEW
INTERIOR APPLICATION

Corner Detail

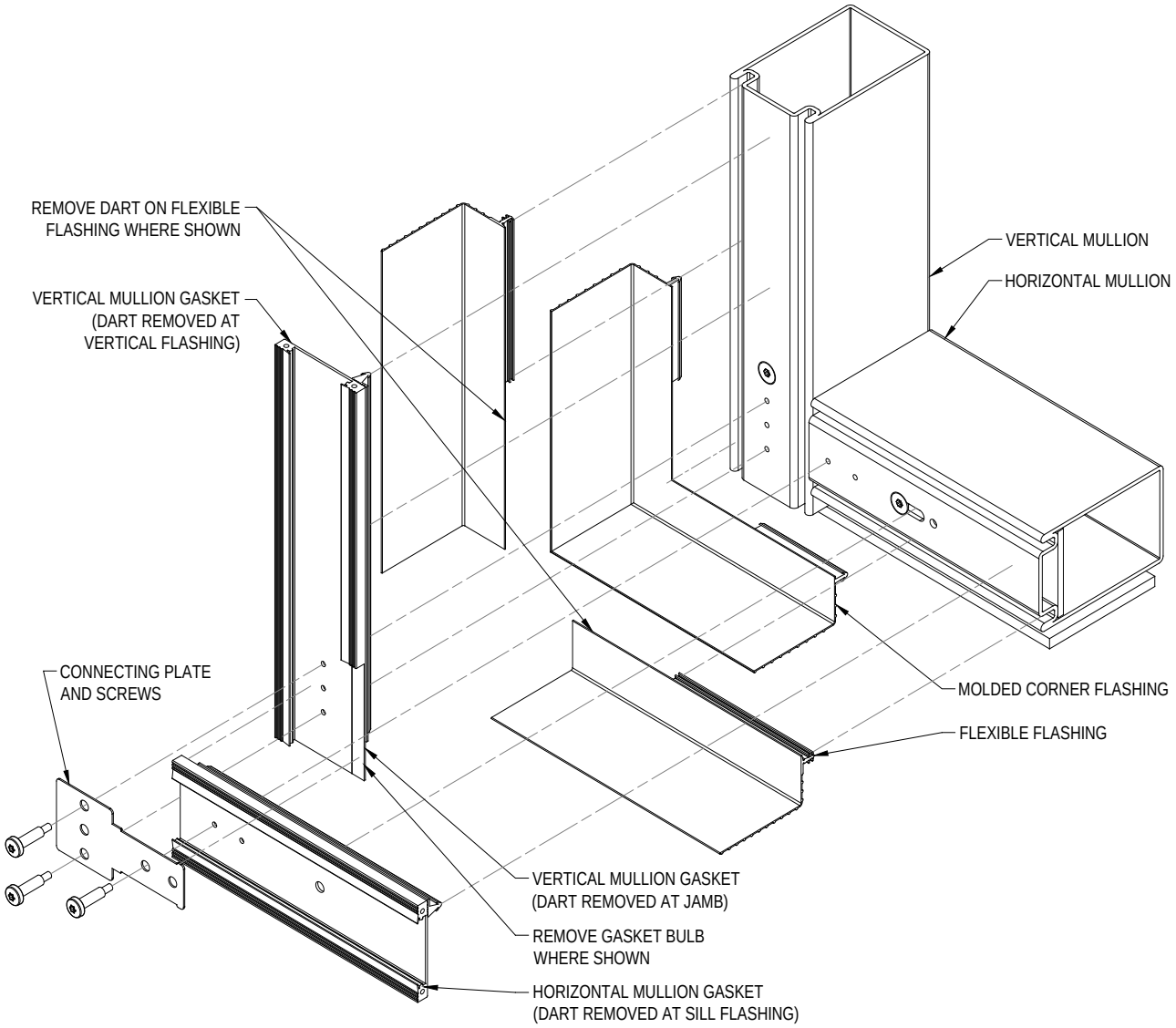

81 CORNER DETAIL
INTERIOR APPLICATION